harman kardon

Model HD 990

CD/ MP3 Player

Service Manual

- Contents -

SERVICE PRECAUTIONS……2
BASIC SPECIFICATIONS……..5
DETAILED SPECIFICATIONS……....6
PACKAGE (120V)……..……7
FRONT PANEL CONTROLS……..……8
REAR PANEL CONNECTIONS……..9
REMOTE CONTROL……..10
OPERATION……..11
BASIC TROUBLESHOOTING GUIDE……15
EXPLODED VIEW (120v)……16
BLOCK DIAGRAM……..17
ELECTRICAL PARTS LIST (120v)…… …….18
PCB DRAWINGS……....24
SEMICONDUCTOR PINOUTS……29
SCHEMATICS……..…49
WIRING DIAGRAM……61

harman/kardon, Inc.
8500 Balboa Blvd.
Northridge, CA. 91329

Released 2010
Discontinued XXXX

Rev0 10/2010

SERVICING PRECAUTIONS

NOTES REGARDING HANDLING OF THE PICK-UP

1. Notes for transport and storage

1) The pick-up should always be left in its conductive bag until immediately prior to use.
2) The pick-up should never be subjected to external pressure or impact.

Storage in conductive bag

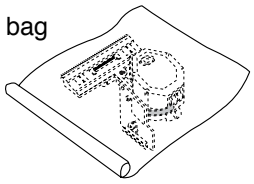

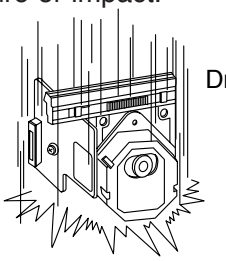

Drop impact

2. Repair notes

1) The pick-up incorporates a strong magnet, and so should never be brought close to magnetic materials.
2) The pick-up should always be handled correctly and carefully, taking care to avoid external pressure and impact. If it is subjected to strong pressure or impact, the result may be an operational malfunction and/or damage to the printed-circuit board.
3) Each and every pick-up is already individually adjusted to a high degree of precision, and for that reason the adjustment point and installation
screws should absolutely never be touched.
4) Laser beams may damage the eyes!
Absolutely never permit laser beams to enter the eyes!
Also NEVER switch ON the power to the laser output part (lens, etc.) of the pick-up if it is damaged.

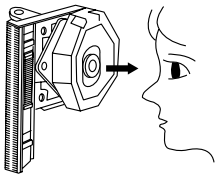

NEVER look directly at the laser beam, and don't let contact fingers or other exposed skin.

5) Cleaning the lens surface
If there is dust on the lens surface, the dust should be cleaned away by using an air bush (such as used for camera lens). The lens is held by a delicate spring. When cleaning the lens surface, therefore, a cotton swab should be used, taking care not to distort this.

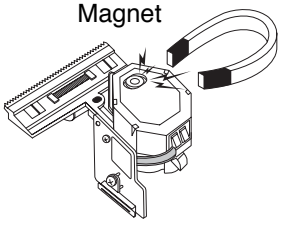

Magnet

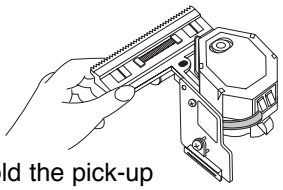

How to hold the pick-up

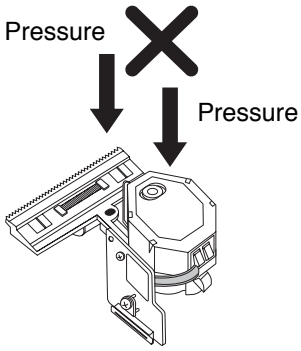

Pressure

Pressure

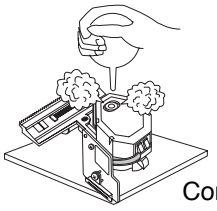

Conductive Sheet

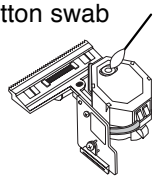

Cotton swab

6) Never attempt to disassemble the pick-up.
Spring by excess pressure. If the lens is extremely dirty, apply isopropyl alcohol to the cotton swab. (Do not use any other liquid cleaners, because they will damage the lens.) Take care not to use too much of this alcohol on the swab, and do not allow the alcohol to get inside the pick-up.

NOTES REGARDING COMPACT DISC PLAYER REPAIRS

1. Preparations

1) Compact disc players incorporate a great many ICs as well as the pick-up (laser diode). These components are sensitive to, and easily affected by, static electricity. If such static electricity is high voltage, components can be damaged, and for that reason components should be handled with care.
2) The pick-up is composed of many optical components and other high-precision components. Care must be taken, therefore, to avoid repair or storage where the temperature of humidity is high, where strong magnetism is present, or where there is excessive dust.

2. Notes for repair

1) Before replacing a component part, first disconnect the power supply lead wire from the unit
2) All equipment, measuring instruments and tools must be grounded.
3) The workbench should be covered with a conductive sheet and grounded.
   When removing the laser pick-up from its conductive bag, do not place the pick-up on the bag. (This is because there is the possibility of damage by static electricity.)
4) To prevent AC leakage, the metal part of the soldering iron should be grounded.
5) Workers should be grounded by an armband (1MΩ)
6) Care should be taken not to permit the laser pick-up to come in contact with clothing, in order to prevent static electricity changes in the clothing to escape from the armband.
7) The laser beam from the pick-up should NEVER be directly facing the eyes or bare skin.

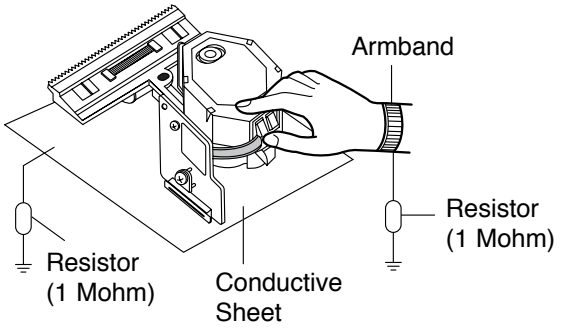

ESD PRECAUTIONS

Electrostatically Sensitive Devices (ESD)

Some semiconductor (solid state) devices can be damaged easily by static electricity. Such components commonly are called Electrostatically Sensitive Devices (ESD). Examples of typical ESD devices are integrated circuits and some field-effect transistors and semiconductor chip components. The following techniques should be used to help reduce the incidence of component damage caused by static electricity.

1. Immediately before handling any semiconductor component or semiconductor-equipped assembly, drain off any electrostatic charge on your body by touching a known earth ground. Alternatively, obtain and wear a commercially available discharging wrist strap device, which should be removed for potential shock reasons prior to applying power to the unit under test.
2. After removing an electrical assembly equipped with ESD devices, place the assembly on a conductive surface such as aluminum foil, to prevent electrostatic charge buildup or exposure of the assembly.
3. Use only a grounded-tip soldering iron to solder or unsolder ESD devices.
4. Use only an anti-static solder removal device. Some solder removal devices not classified as "anti-static" can generate electrical charges sufficient to damage ESD devices.
5. Do not use freon-propelled chemicals. These can generate electrical charges sufficient to damage ESD devices.
6. Do not remove a replacement ESD device from its protective package until immediately before you are ready to install it. (Most replacement ESD devices are packaged with leads electrically shorted together by conductive foam, aluminum foil or comparable conductive materials).
7. Immediately before removing the protective material from the leads of a replacement ESD device, touch the protective material to the chassis or circuit assembly into which the device will by installed.

CAUTION : BE SURE NO POWER IS APPLIED TO THE CHASSIS OR CIRCUIT, AND OBSERVE ALL OTHER SAFETY PRECAUTIONS.

8. Minimize bodily motions when handing unpackaged replacement ESD devices. (Otherwise harmless motion such as the brushing together of your clothes fabric or the lifting of your foot from a carpeted floor can generate static electricity sufficient to damage an ESD device).

HD 990

Basic Specifications

Specifications

Signal Format

Sampling Frequency:	32kHz to 96kHz
D/A Conversion:	Multilevel delta-sigma, dual DAC configuration
Oversampling:	24-bit/384kHz asynchronous sample rate converter

Discrete Analog Output Section

Error Correction:	Error correction
Frequency Response:	20Hz – 20kHz +0/–0.5dB
Total Harmonic Distortion (THD):	<0.0006% @ 1kHz
Dynamic Range:	>120dB
Signal-to-Noise Ratio:	116dB
Channel Separation:	>115dB
Line-Output Level:	2.0V RMS (unbalanced) 4.0V RMS (balanced)

General

Power Requirement:	100V – 240V 50Hz/60Hz
Power Consumption:	<20 watts (on) <2 watts (standby)
Dimensions (width x height x depth):	17-5/16" x 2-1/2" x 13-1/16" (440mm x 64mm x 332mm)

Depth measurement includes knobs, buttons and connection jacks.
Height measurement includes feet and chassis.

Weight	8.4 lbs (3.8kg)

HD990 Detailed Technical Specifications				
ITEM	**SPECIFICATIONS**	**Measured at**	**TEST CONDITIONS**	**OUTPUT LEVEL**
Audio				
Frequency Response	< +0.1dB, -0,5 dB, 20 kHz <-3dB, 48 kHz <-6dB, 96 kHz	Line Output	Ref.:1KHz, 0dB, CD:4Hz~20KHz Other frequency response result tested for the analog output stage only, using digital input.	
De-emphasis response	<+0,1, -0,5 dB, 20-20 kHz	Line Output	Ref.:1KHz, 0dB, CD:4Hz~20KHz with Emphasis	
DNR 16 bits	<-96dB unweighted (WB 20-20kHz)	Line Output	Use CD-DA	
DNR 16 bits	<-100dB A-Weighted (WB 20-20kHz)	Line Output	Use CD-DA	
DNR 24bits unbalanced output	<-115db A-weighted	Line Output	Use Digital Input	
DNR 24bits unbalanced output	<-118db A-weighted	Line Output XLR	Use Digital Input	
Distortion (THD+n) 16 bits, unbalanced 20-20kHz	<0.0025% unweighted	Line Output	0 dB fs	
Distortion (THD+n) 24 bits, unbalanced 20-20kHz	<0.001% unweighted	Line Output	0 dB fs	
Distortion (THD+n) 24 bits, balanced 20-20kHz	<0.0008% unweighted	Line Output	0 dB fs	
CH. Separation	> 100 dB	Line Output	L->R / R->L	1kHz
Channel Balance	+/-0.2dB	Line Output		
IMD	<0,0015%	Line Output	SMPTE, (10K + 11K), 80 KHz BW	
L to R Phase Shift	<0,7 deg	Line Output	10 - 20kHz	
Linearity	0 dB +/- 0.1 dB	Line Output	1kHz, 0dBfs	
Low Linearity Level	<±0,5 dB	Line Output	1 kHz, -110 dBfs	24 bits
Output Level	2Vrms +/-5%	Line Output	1kHz, 0dB, 10 kohms load	
Digital Output				
Output Level	500mV(p-p) +/-20%	Coax output		
Output Impedance	75 ohms	Coax output		
Output jitter level	<1mUI			
Digital Input				
Input Level	500mV(p-p) +/-20%	Coax output		
Output jitter level	<1mUI			
Loader				
	CD SPEC	**TEST CONDITIONS**		
ECCENTRICITY	140 µm	TCD 714		
VERTICAL DEVIATION	0.92 mm	MCD-151, TCD-731RA		
DEFECT(INTERRUPTION)	900 µm	MCD-131		
DEFECT(BLACK DOT)	1000 µm	TCD 725B		
DEFECT(FINGER PRINT)	75um	TCD 725B		
DEFECT(SCRATCH)	2mm	TCD 725B		
SEARCH TIME	2.5sec			
ITEM	**SPECIFICATION**	**TEST CONDITIONS**		
LOADING TIME	30 sec or less	OFF-Play		
UN-LOADING TIME	5 sec or less	Play-OFF		
START UP TIME	3 sec or less	Stop-Play		
ACCESS TIME	3 sec or less	(CD)		

PACKAGING

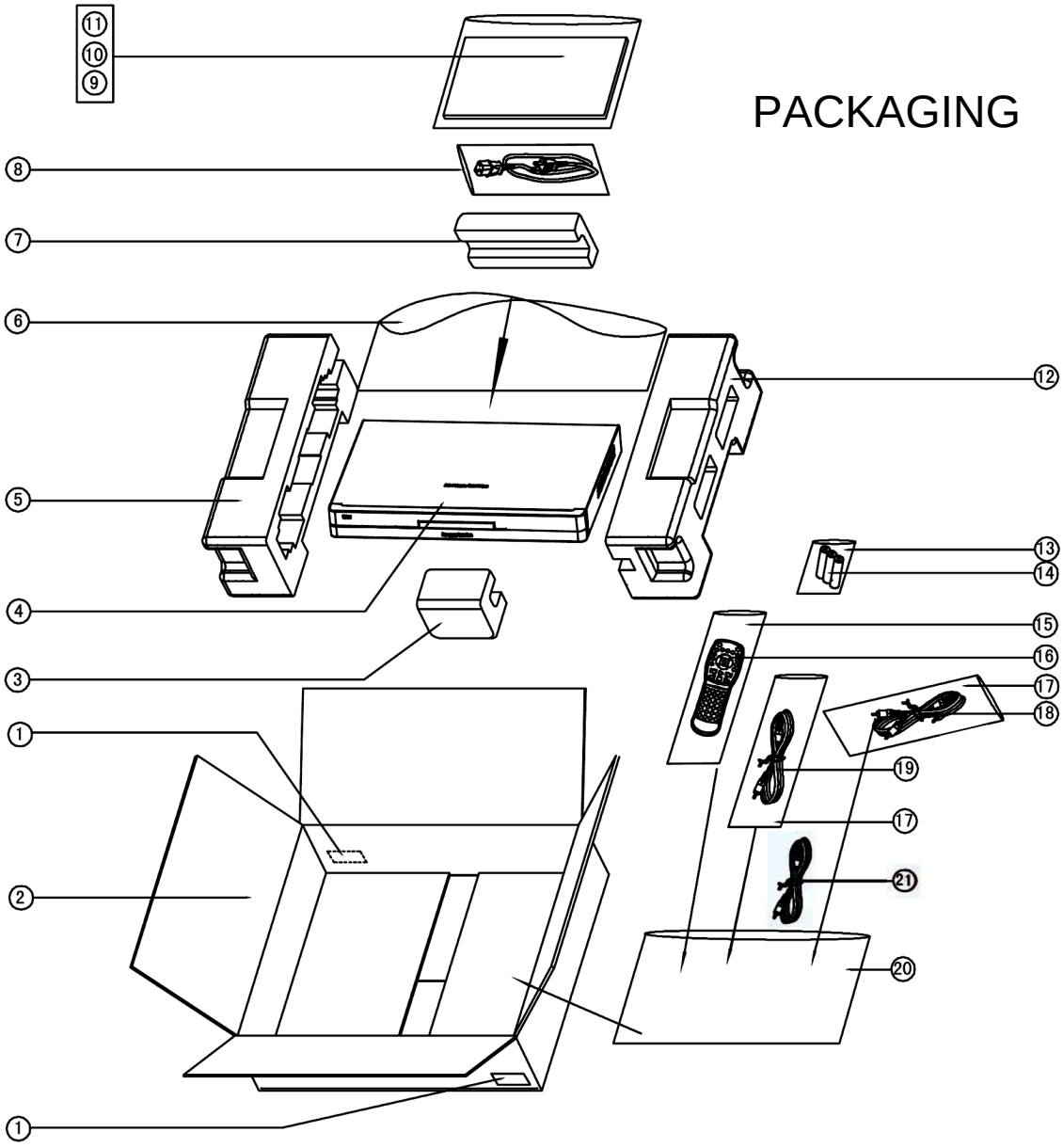

ITEM	PART NUMBER	DESCRIPTION	QTY
1		Bar Code Label	1
2	0100BZXWE2525	Outer Carton	1
3	0100DPQTE443	Polyfoam - front	1
4	HD 990	HD 990	1
5	0100DPQTE444	Polyfoam - left	1
6		Plastic bag	1
7	0100DPQTE446	Polyfoam - rear	1
8	0147CNTACXE369	AC Power Cord	1
9	visit www.harmankardon.com	Owner's manual	1
10		Plastic bag	1
11		Safety & Warranty cards	1
12	0100DPQTE445	Polyfoam - right	1
13		Plastic bag	1
14		Battery set, RC, AA	1
15		Plastic bag	1
16	0225HD990	HD 990 Remote Control	1
17		Plastic bag	1
18	0147CNTCTXE027	Cable for Remote connection	1
19	0147CNTCTXE033	Dual audio RCA cable, 1.5m	1
20		Plastic bag	1
21	0429000000004	HRS link Cable, 1.5m	1

HD 990

Front Panel Controls

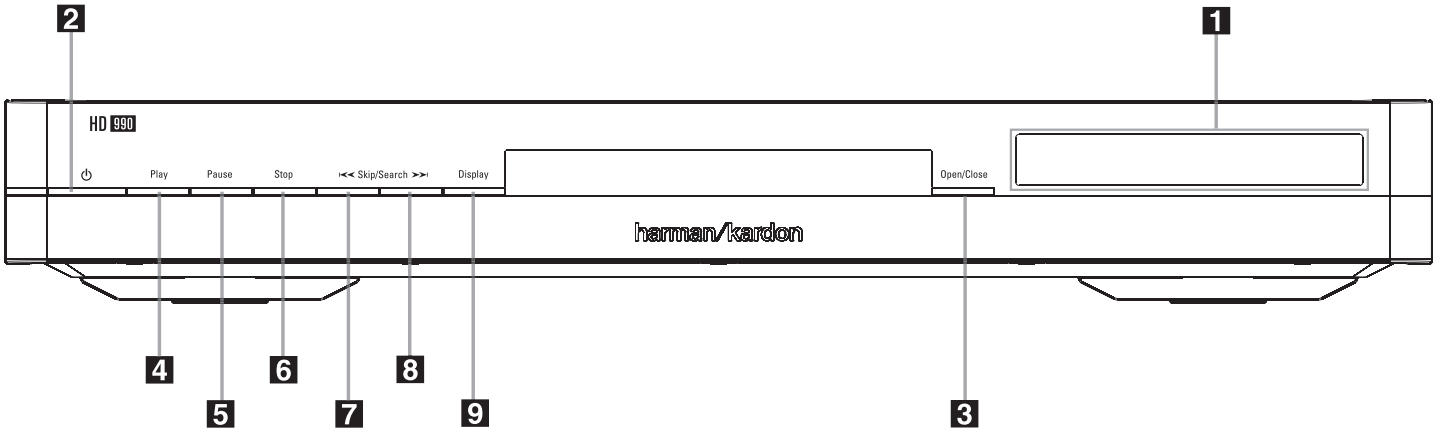

1 Main Information Display
2 Power On/Off (Standby) and Status Mode Indicator
3 Open/Close
4 Play
5 Pause
6 Stop
7 Skip/Search (Previous)
8 Skip/Search (Next)
9 Display Dimmer

1 Main Information Display: This display delivers messages and status indications to help you operate the CD player.

2 Power On/Off (Standby): Press the button once to turn the CD player on, press it again to put the unit in the Standby mode.

3 Open/Close: Press this button to open or close the disc tray.

4 Play: Press to initiate playback or to resume playback after Pause has been pressed.

5 Pause: Press this button to momentarily pause playback. To resume playback, press the button again. If a CD is playing, the sound will be muted.

6 Stop: Press this button to stop the disc currently being played or to exit program mode (see page 11 for complete information).

7 Skip/Search (Previous): Press this button to move backward through the music tracks on a CD disc. Keep the button pressed to search backward at one of the available speeds.

8 Skip/Search (Next): Press to move forward through the music tracks on a CD. Keep the button pressed to search forward at one of the available speeds.

9 Display Dimmer: Press this button to reduce the brightness of the Information Display by 50% or to turn the display off completely in the following order: FULL BRIGHTNESS ➔ HALF BRIGHTNESS ➔ OFF ➔ FULL BRIGHTNESS.

Important Note: When the unit is turned off (to Standby), pressing the Play button **4** ⑩ on the front or on the remote will automatically turn on the player and start playback.

HD 990

Rear Panel Connections

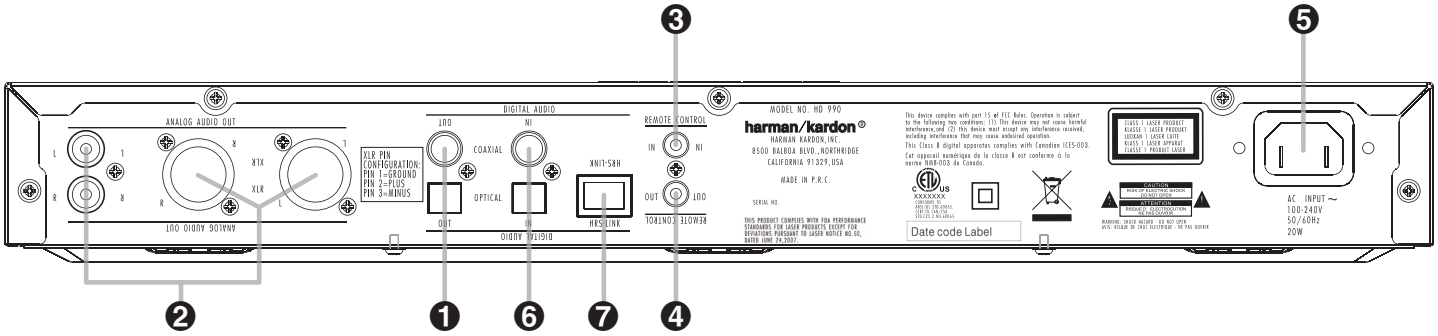

❶ Digital Output
❷ Audio Outputs
❸ Remote Control Input
❹ Remote Control Output
❺ AC Power Cord
❻ Coaxial and Optical Digital Inputs
❼ HRS-Link Output

❶ **Digital Output:** Connect this jack to the coaxial or optical digital input of an external digital-to-analog converter for direct access to the digital signals of the CD player or the external digital audio source. DO NOT connect this jack to the standard audio inputs of any device.

❷ **Audio Outputs:** Connect these jacks to the CD audio inputs of your receiver, surround processor or preamplifier. If your amplifier features balanced XLR inputs, you may use the XLR outputs instead. Sound quality via balanced connection is usually more dynamic, with even better signal-to-noise ratio. Pin configuration for the XLR Outputs: Pin 1 is Ground, Pin 2 is Plus/Hot, Pin 3 is Minus/Cold.

❸ **Remote Control Input:** Connect the output of a remote infrared sensor or the remote control output of another compatible Harman Kardon product. This will enable the remote control system to operate even when the front panel remote sensor is blocked. It will also allow use of the CD player with optional, external control systems.

❹ **Remote Control Output:** Connect this jack to the input of another compatible Harman Kardon remote-controlled device to have the remote sensor on the CD player provide signals to other products.

❺ **AC Power Cord:** Connect this plug to an AC outlet. If the outlet is switch-controlled, make certain that the switch is in the On position.

❻ **Coaxial and Optical Digital Inputs:** Connect these jacks to the coaxial or optical digital output of an external audio source. This will enable you to have the digital-to-analog conversion of that source done by the highgrade audiophile digital-to-analog convertors in the HD 990 rather than the (older ones) in the external source, for better audio quality.

❼ **HRS-Link Output:** The special High-Resolution Synchronization Link cable (optional) connects to the HRS jack on the matching HK 990 amplifier (or other compatible HK amplifiers) to attain an even higher quality of sound. You need only connect the HRS-Link cable for complete synchronization and audio. No further cable is necessary.

HD 990

Remote Control Functions

HD 990 Remote Control Functions

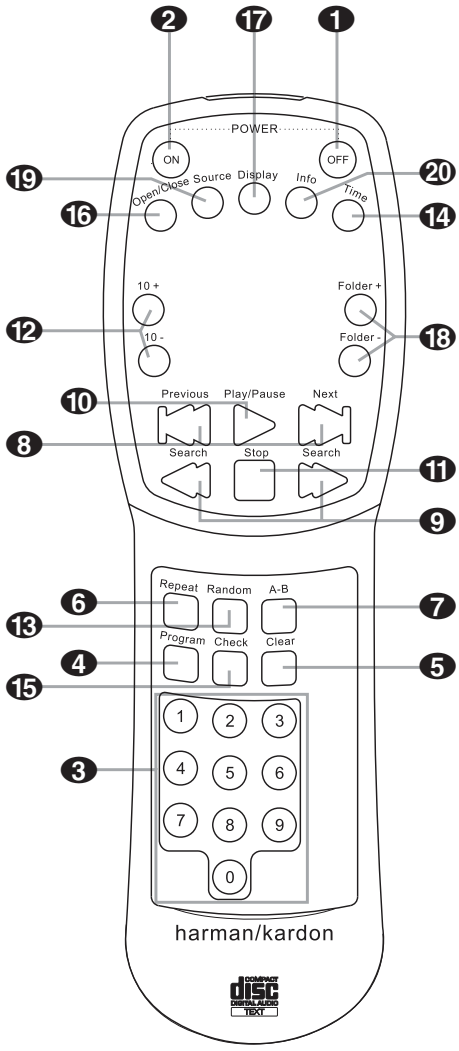

1. Power Off
2. Power On
3. Numeric Controls
4. Program Button
5. Clear Button
6. Repeat Button
7. Repeat A ▶ B Button
8. Skip Buttons
9. Search Buttons
10. Play/Pause Button
11. Stop Button
12. +10/–10 Buttons
13. Random Button
14. Time Button
15. Check Button
16. Open/Close Button
17. Display Button
18. Folder Buttons
19. Source Button
20. Info Button

1 Power Off: Press this button to put the unit in the Standby mode.

2 Power On: Press this button to turn on the CD player. Note that in order for the Power On button to operate, AC power must be applied to the unit, and the Status Mode Indicator 2 should glow orange (see page 9 for more information). The unit will also turn on when the Play 4 10 or Open/Close 3 16 button is pressed.

3 Numeric Controls: Press these buttons to select a specific track on a disc. The unit will immediately search for the track and begin to play it. For tracks 1 through 9 on a disc, you need only press the desired number. For tracks 10 and above, the second and third digit of the number must be entered within two seconds of the first digit. (See page 9 for more information.) These buttons are also used to enter track numbers into the memory for pre-programmed play lists. (See page 11 for complete information on programming the CD player.)

4 Program Button: Press this button to begin the process of programming the CD player to play the tracks on a disc in a specific order. Once the button is pressed, enter each of the desired track numbers in quick succession using the Numeric Controls button 3. When you have entered the tracks to be played, press the Play button 10 to begin the programmed sequence. (See page 11 for complete information on programming the CD player.)

5 Clear Button: Press this button to remove selected or all tracks from the programmed sequence. (See page 11 for complete information on programming the CD player.)

6 Repeat Button: Press this button once to repeat only the track that is currently being played, and note that the Repeat and One indicators will light in the Information Display. Press the button a second time so that the Repeat and All indicators are illuminated to repeat all tracks on the disc. (See page 12 for more information on Repeat Play.)

7 Repeat A-B Button: Press this button to repeat a segment of the disc. Press the button once to mark the start of the portion to be repeated. Press it again at the end of the desired sequence. The marked passage will play continuously until the **Stop** button 11 is pressed. (See page 12 for more information on Repeat Play.)

8 Skip Buttons: Press one of these buttons to move to the next track ►► I, or to move back to the previous track I◄◄ (see page 10).

9 Search Buttons: Press one of these buttons to search forward ►► or backward ◄◄ through a disc to locate a particular portion of the selection being played. Holding the buttons pressed for some seconds will increase the search speed (see page 10).

10 Play/Pause Button: Press this button to start the playback of a CD. If the CD drawer is open, pressing this button will automatically close the drawer. Press this button once during playback to momentarily stop a disc. When the button is pressed again, the disc will resume play at the point it was stopped.

11 Stop Button: Press this button to stop the disc currently being played or to escape from the program mode (see page 11 for complete information).

12 +10/–10 Buttons: Press the +10 button to move to the 10th track after the current track playing. Press the –10 button to move to the 10th track before the track currently playing.

13 Random Button: Press this button to have all of the tracks played in a random order. (See page 9 for more information.)

14 Time Button: Press this button to select the time display. In normal operation, the display will show the running time of a track being played. Press the button once to check the time remaining for the track in play. Press the button a third time to view the elapsed time for the CD being played, and a last time for the total play time remaining for the disc in play (see page 10).

15 Check Button: Press this button to check the order of tracks programmed into the CD player's memory. (See page 11 for complete information on programming the CD player.)

16 Open/Close Button: Press this button to open or close the disc drawer. The drawer may also be closed by pressing the **Play** button 4 10 or by gently pressing the edge of the drawer. However, we do not recommend pushing the drawer, as damage to the transport mechanism may result.

17 Display Button: Press this button once to dim the front panel display to half brightness. Press it again to turn the display lights off completely. Another press will return the display to normal brightness.

18 Folder Buttons: Press the Folder + button to move to the next folder with MP3 data, and the Folder – button to move to the previous folder with MP3 data.

19 Source Button: Press this button to switch between the CD player's output and the output of other sources connected to one of the digital inputs 6 (see page 10 for more information).

20 Info Button: Pressing this button consecutive times shows the different CD text information available on a CD, or ID3 and other information available on a disc with MP3 data. To return to normal Track number/Time indication, press the Time button 14. (See page 10 for more information.)

HD 990

Operation

Operation

Loading and Unloading Discs

To load a disc, first turn the unit on (if it is not already) by pressing the Power Switch 2 on the front panel or the Power On button ❷ on the remote, then press the Open/Close button 3 ⓰, taking care to make certain that the space in front of the drawer is not obstructed. When the unit is turned off (to Standby), pressing the Play button 4 ⓾ on the front or on the remote will automatically turn on the CD player and start playback. Also, pressing the Open/Close button from Standby switches on the player directly and opens the drawer.

Load the disc in the tray with the printed (label) side facing up. Make certain that the disc is centered in the tray. Either 12cm (5") or 8cm (3") discs may be used. When an 8cm disc is played, it should be carefully centered within the smaller ridges inside the cassette drawer.

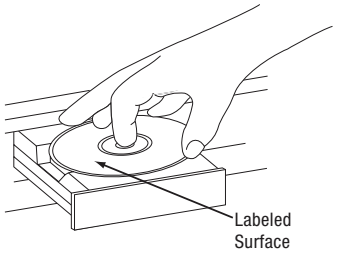

To retract the drawer back into the player after loading a disc, press the Open/Close button 3 ⓰. When the drawer is closed the display will indicate the total number of tracks on the disc and the total running time of the disc.

The drawer will also close when the Play button 4 ⓾ is pressed. The drawer will close and the disc will start playing the first track.

To remove a disc from the player, press the Open/Close button 3 ⓰. The drawer will open, allowing the disc to be removed.

Disc Handling Notes: When loading or unloading discs, it is best to hold them by the edges. While compact discs are very reliable, rough handling may damage them. Avoid scratching the bottom (non-printed) side of discs, or any handling that will leave fingerprints.

To avoid damage to the disc and player, always seat discs so that they are centered in the tray. Do not lift the player while the disc tray is opening or closing, as this may cause the disc to unseat from the tray and possibly jam.

Normal Play

To play a disc, first turn the HD 990 on using the Power Switch 2 on the front panel or the Power On button ❷ on the remote control. When the unit is turned off (to Standby), pressing the Play button 4 ⓾ on the front or on the remote will automatically turn on the CD player and start playback.

To load or change a disc, open the disc drawer by pressing the Open/Close button 3 ⓰. Place a disc in the tray following the instructions shown above.

Pressing the Open/Close button once a disc has been carefully seated will close the disc drawer while the message "Closing" will appear in the information display. As soon as the tray is closed the display will show the message "Reading" while the table of contents (TOC) of the disc is read. Note that particularly with CD-RW discs this tracking may take some time due to the reflectibility and data structure being different from normal discs. Afterward, the information display will show the total number of tracks and the total running time of the disc. Note that with MP3 CDs, the total running time will not be shown.

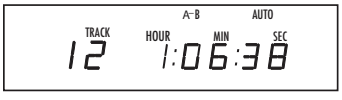

The drawer will also close when the Play button 4 ⓾ is pressed. The drawer will close and the disc will start playing the first track.

To play all of the tracks on the disc in order, press the Play button 4 ⓾. A play symbol ▶ will appear in the Main Information Display 1, as well as indication of track number and time elapsed.

To play all of the tracks in random order, press the Random button ⓭. The Random indicator will light when that mode is in use. Random can be activated also while a track is playing. When Random is activated while programmed play is in use (see page 11), all programmed tracks will be played in random order.

You may also select a specific track by pressing the Skip buttons 7 8 until the desired track number is displayed (see page 10). The track may also be selected directly by entering the track number via the Numeric Controls ❸, simply enter the track number by pressing the buttons that correspond to the desired track. Note that when a two- or three-digit track number is being entered, the second and third digit of the number must be pressed within two seconds of the first digit. After the track is selected, press the Play button 4 ⓾.

While the disc is playing, the track being played will show as a number in the middle of the display just below the word "Track." The elapsed time of the track being played will also appear in the display. As a disc plays, the track numbers will change, and the time will reset to 00:00 at the start of each new track.

To momentarily pause the play of a disc, press the Pause button 5 ⓾. Note that a red pause indication ❙❙ will appear in the display to remind you that the disc is paused. Press either the Play button 4 ⓾ or the Pause button 5 ⓾ to resume normal play.

To stop the disc, press the Stop button 6 ⓫. When the Stop button is pressed the display again will show the total number of tracks and total running time of the disc.

To remove a disc from the player, press the Open/Close button 3 ⓰. To prevent dirt and dust from entering the unit, do not leave the disc tray open.

To place the unit in a Standby mode, press the Power Switch 2 on the front panel or the Power Off button ❶ on the remote. The display will show a "Standby" message for a moment and the Status Mode Indicator will glow orange, indicating that the unit is off, but ready to accept a Power On command from the remote. If the disc drawer is open, it will automatically close when the unit is placed in the Standby mode. This ensures that the unit will not be harmed by dust, dirt or inadvertent damage to the drawer mechanism.

Note that the unit is not removed from AC main power when it is in the Standby mode but its power consumption is reduced to a low value. To remove the AC power completely from the unit its AC Power Cord ❺ must be plugged into a switch-controlled AC outlet that is turned off. We recommend using the switched AC outlet on the rear side of a receiver or amplifier. When that AC outlet will be turned on, the HD 990 will always turn to the Standby mode even if it was on before the AC power was removed.

Display Dim

In some situations, it may be desirable to reduce the brightness of the display or to turn it off completely. To do this, press the Display button ⓱ on the remote or the Display Dimmer button 9 on the main unit to dim the display to half brightness. Press it again to turn the display off. A third press will return the display to normal level.

HD 990

Operation

Time Display

The CD player's time display is capable of showing a wide range of information about a CD.

In normal operation the display will show the total running time of a CD after the disc is first put in the unit. When the disc is played, the display will show the running time of a track in play. Each time the track changes, the time display will reset to 00:00 and begin to increase again as the new track plays.

To view the time remaining on an individual track, press the Time button ⑭ on the remote once. The display will now show the time left in the track in play, and a "–" will light in front of the time display as a reminder of the display's status.

To view the elapsed time of the disc currently playing, press the Time button ⑭ again.

To view the total time remaining to play on the disc, press the Time button ⑭ again, a number greater than the formerly shown track remaining time (except the last track of the disc is played) will appear in the display, again with a "–" in front.

When the Time button is pressed again the display will return to show the running time of the track in play.

Note: When a program is played (see page 11), all time modes are selectable, too, except the total time remaining on the disc.

The Time mode is not available when playing back discs containing compressed MP3 data.

Disc Info

The HD 990 is able to show CD-text information from CD discs, as well as ID3 tag and other information from discs containing MP3 data. Please note that not all CDs contain CD-text. In that case, the Main Information Display will show "No CD-Text" and will return to the Time mode previously selected. If you play back a CD that contains CD-text information the Text indicator will light in the Information display 1. During play, the artist name, track name and album name can be made visible on the Main Information Display 1 by pressing the Info button ⑳ several consecutive times. Each press of the Info button ⑳ will show the next line of information. If the text is longer than 12 characters, the text will scroll continuously from right to left on the Main Information Display 1.

If you play a disc with MP3 data, the file name, the data rate (constant bit rate CBR and variable bit rate VBR) and folder/root name can be made visible on the Main Information Display 1 by pressing the Info button ⑳ several consecutive times. If ID3 tag information is included in the MP3 data, the artist name, track name and album name can also be made visible. Each press of the Info button ⑳ will show the next line of information. If the text is longer than 12 characters, the text will scroll continuously from right to left on the Main Information Display 1. To return to the normal track/time indication press the Time button ⑭.

Search

If you wish to quickly scan through a disc to locate a particular passage or track, press and hold the Search buttons. The Forward Search button ►► 8 ⑨ plays the disc forward in high speed, while the Reverse Search button ◄◄ 7 ⑨ plays the disc backward in high speed. Holding the buttons pressed will triple the search speed after 3 seconds. When the desired part of the disc is heard, release the Search button to resume normal play speed.

Skip

To move from one track on the disc to another during play mode, press one of the Skip buttons. Pressing the Forward Skip button ►►| 8 ⑧ will move you forward through the disc, one track at a time, while pressing the Reverse Skip button |◄◄ 7 ⑧ once will move you back to the start of the actual track (as long as >3 seconds of the track have elapsed), and pressing it multiple times will move you back one track at a time. Holding any Skip button pressed enables scanning quickly through all tracks on the disc, as described previously.

The Skip buttons may be used when the CD player is either playing or stopped. If the unit is stopped, the Skip buttons may be used to locate the first track to be played. The Play button 4 ⑩ must be pressed to begin play. If the Skip buttons are used while the unit is already playing (as described above), the audio output will stop while the new track is located, and play will automatically resume with the new track.

If the Skip buttons are pressed when program play is in use (see page 11), the unit will move from one programmed track to another.

Folder

Discs containing compressed MP3 data often contain several directories and folders with data. To show the name of the current directory or folder playing, press one of the Folder +/– buttons once. To change to the next directory or folder, press the Folder + button ⑱ again within three seconds after the first press. For the previous directory or folder, press the Folder – button ⑱.

The CD player counts each directory and folder as one folder. The player starts to count in the main directory, and pressing the Folder + button ⑱ will start playback of the first folder in this directory. Pressing the Folder + button ⑱ again will start playback of the second folder in the directory. Continue pressing the Folder + button ⑱ until the last folder in the directory has been played. At this time, pressing the Folder + button ⑱ will start playing the next directory.

Note that the Folder +/– buttons do not function when the CD player is playing the tracks of a disc containing MP3 data in random order.

+10/–10

Due to the compressed format of MP3 data, discs can contain several hundred audio tracks. In order to find the right track within these hundreds of tracks, the CD player lets you skip through the contents of your disc in steps of 10 tracks. Press the +10 button ⑫ to change to the 10th track after the track currently playing. If there are less then 10 tracks remaining on the disc, the last track will be played. Press the –10 button ⑫ to change to the 10th track before the track currently playing. If there are less then 10 tracks since the beginning of the disc, the first track will be played.

Input/Source Selection

A unique feature of the HD 990 is that it allows other source components to be played back using the high-grade audiophile digital-to-analog convertors inside the CD player. Especially source components using older and less powerful convertors will benefit from this feature.

Connect the coaxial or optical digital output of the external source component to the Coaxial or Optical Digital Inputs ⑥ on the rear panel of the CD player.

In order to select the external source component for playback, press the Source Button ⑲. The first press of this button will show the input currently played, indicated by "Player" for the CD player, "Coaxial In" (Digital in 1) or "Optical In" (Digital in 2). Within 2 seconds, press the Source Button ⑲ again until the requested source has been selected.

Note that in order to hear the sound from the external source when connected via the HD 990, the input of your amplifier or receiver should be the one to which the HD 990 is connected.

Important Note: The player will only output 2-channel PCM signals. Neither multi-channel Dolby Digital or DTS nor their 2-channel downmix signals will be.

HD 990

Programmed Play Operation

Programmed Play

The HD 990's advanced programming capability enables you to select certain tracks, to preset the order in which these tracks play, and to clear specific programmed tracks after the program was made.

Programmed play allows you to program up to 32 tracks into the HD 990's memory. To begin programming the CD player, make sure that the unit is in Stop mode, then press the Program button ❹. The Program indicator will light in the Information Display **1**, the number 001 will blink below the Program indicator, showing the track number selected, and PROG-01: 001 will appear in the Information Display, replacing the track time. This indicates that you are about to program the first track.

You may now begin to enter the tracks in the order in which you wish to have them play. To select a track on the disc, press the Numeric buttons ❸ corresponding to the desired track. Be certain to enter the second and/or third number of two- or three-digit numbers within two seconds after the first number was entered. You may also use the Skip buttons **7** **8** ❽ to select a track. When the track is selected, press the Program button ❹. Note that the program-step indication on the right side of the Information Display will change to PROG-02: 001.

You may now select another track for the next program step, following the instructions shown above. When the track is selected, press the Program button ❹ again. Repeat this procedure for each program step until you have completed the desired programming. Press the Stop button **6** ⓫ once to complete a program sequence, or press Play **4** ⓾ to begin immediate play of a program sequence. If the maximum of 99 program steps is reached, the program-step indication at the right side of the Information Display will go out, and the disc and track that have been programmed as the first program step will be shown.

Once a program list has been entered, press the Play button **4** ⓾ to begin listening to the sequence. After the entire program has been played, the CD player will stop. As long as the Stop button **6** ⓫ has not been pressed twice and the Program indicator remains lit, you may repeat the programmed-play sequence again by pressing the Play button **4** ⓾.

Editing a Program

A program can be edited even after it was completed by pressing the Stop button **6** ⓫ once: Each time you press the Program button ❹ the track number and program step number will be displayed in the programmed order, but with steady track numbers (not blinking) in contrast to the programming mode. As soon as the track number starts blinking (this will take 1 second), the appropriate program step number shown at the left side is not programmed yet; now you can change the track number with the Skip buttons **7** **8** ❽ or the Numeric buttons ❸ as described above and add it to the program list by pressing the Program button ❹.

Pressing the Stop button **6** ⓫ twice will return to normal mode and the Program indicator will go out, but the program will stay in memory and can be recalled easily by pressing the Program button. But pressing the Clear button ❺ (see below) or opening the disc drawer by pressing Open/Close **3** ⓰, will erase the program information from the unit's memory.

Checking Program Contents

To check the contents of a program while the unit is stopped at first note that the Program indicator is lit (otherwise press Program) and the program step indication PROG-01: is not lit (otherwise press Stop once). Each time the Check button ⓯ is pressed now, the Information Display will step through each of the programmed tracks. To cancel the check mode press the Stop button twice.

Clearing Programs

To clear a single track from the program list, press the Program button ❹ until the track to be deleted from the program sequence appears in the Information Display **1**. When the track number appears, press the Clear button ❺ once, the track selected will be deleted and the track number will be replaced by the next programmed one. Now you can delete that track too with the Clear button or press the Stop button **6** ⓫ and again the Program ❹ button to select lower track numbers to be deleted.

When the unit is stopped and the program step indication PROG-01: 001 is not lit (otherwise press Stop once), but the Program indicator is still lit (otherwise press Program ❹) you may clear the entire contents of a program by pressing the Clear button ❺.

Important Note: When you've pressed the Program button ❹ (once or several times) and the track number on the right starts blinking, the appropriate program step number (e.g. PROG-02:008) shown at the left display side is not programmed yet. Do not continue to press the Program button now, otherwise the track selected will be memorized too. If you´re in doubt, press Stop button **6** ⓫ and start the procedure again with Program ❹.

Important Note: Tracks programmed as described above can be played repeatedly too. When you press Repeat ❻ once after a program is created (the Program indicator must be lit, otherwise press Program) and the program is played, the Repeat 1 indicator will light and the track currently playing will be repeated continuously. If Repeat is pressed twice, "Repeat All" will be displayed, all programmed tracks will be played subsequently and the sequence will be repeated continuously until the Stop button is pressed.

HD 990

Repeat Play Operation

Repeat Play

The HD 990's programming system enables you to repeat either a single track, the entire disc (respectively all programmed tracks) or a specially programmed passage that you select.

Repeat One Track

To repeat the track in play, press the Repeat button 6 once. The Repeat and 1 indicators will light and the track will continue to play over and over again continuously. If the track is changed by pressing the Skip buttons 7 8 8 while the Repeat function is in use, the newly selected track will be played normally. To stop the repeat play, press the Stop button 6 11 or press the Repeat button 6 until the Repeat indicator goes out.

Repeat All Tracks

To repeat all of the tracks on a disc during play mode, press the Repeat button 6 until the Repeat and All indicators light up. When you see these indicators, the entire disc or all programmed tracks will play through to the end, and then start again from the beginning. The disc will play continually until the Stop button 6 11 is pressed.

Repeat A-B

The CD player may be programmed to repeat any section within a track, or a complete passage or program that includes material in a series of tracks.

To program the unit for A-B play, first locate the point on the disc where you wish to begin the repeated section. At that point, press the Repeat A-B button 7. The Repeat indicators will light in the Information Display and an A- indicator to show that the program process has started. Let the disc continue to play or press the Search ►► button 7 8 8 or Skip ►►I button 7 8 8 on the front or remote until you have reached the end of the section to be repeated. When the end point is reached, press the Repeat A-B button 7 again. Note that the Repeat and A-B indicators will now be illuminated.

Once the Repeat A-B button 7 is pressed for the second time to complete the programming, the CD player will automatically go to the beginning of the selected passage and continue to play the section over and over.

To resume normal play press the Repeat A-B button 7 again. The Repeat and A-B indicators will go out, and the rest of the disc will play normally.

Important Note: Tracks programmed as described in "Programmed Play" on page 11 can be repeated too. When you press Repeat 6 once after a program is created (the Program indicator must be lit, otherwise press Program 4) and the program is played, the Repeat 1 indicator will light and the track currently playing will be repeated continuously. If Repeat is pressed twice, Repeat All will be displayed, all programmed tracks will be played subsequently and the sequence will be repeated continuously until Stop 6 11 is pressed.

HD 990

Troubleshooting

Troubleshooting

Symptom	Cause	Solution
No lights on front panel	• No AC Power	• Make certain that AC power cord is plugged into a live outlet.
Remote does not appear to operate	• Power switch turned off • Weak batteries • Blocked sensor	• Turn on Power switch. • Install fresh batteries, observing polarity indications. • Remove obstructions from the front panel sensor or connect a remote sensor to the Remote In jack on the rear panel.
Front panel lights, but CD does not play	• Disc is upside down	• Reload disc with label side facing up.
Play indicator lights, but no sound is heard	• Poor connections • Wrong source connections	• Make certain that connections are secure and made to the correct (e.g., CD) input. • Select CD source on receiver or preamp.
Sound skips or stutters during play	• Disc may be damaged • Surface vibrations	• Try another disc. • Isolate the unit from vibration by placing it on a firm surface or move it further away from the speakers.
Sound is continually distorted	• Incorrect input	• Make certain that the analog Audio Outputs ❷ of the CD player are connected to a line-level audio input, NOT to a digital audio or phono input.
“Error” lights up continuously in the display	• Various	• Turn the unit off and on again. If the problem persists, turn the AC power to the CD player off and on.

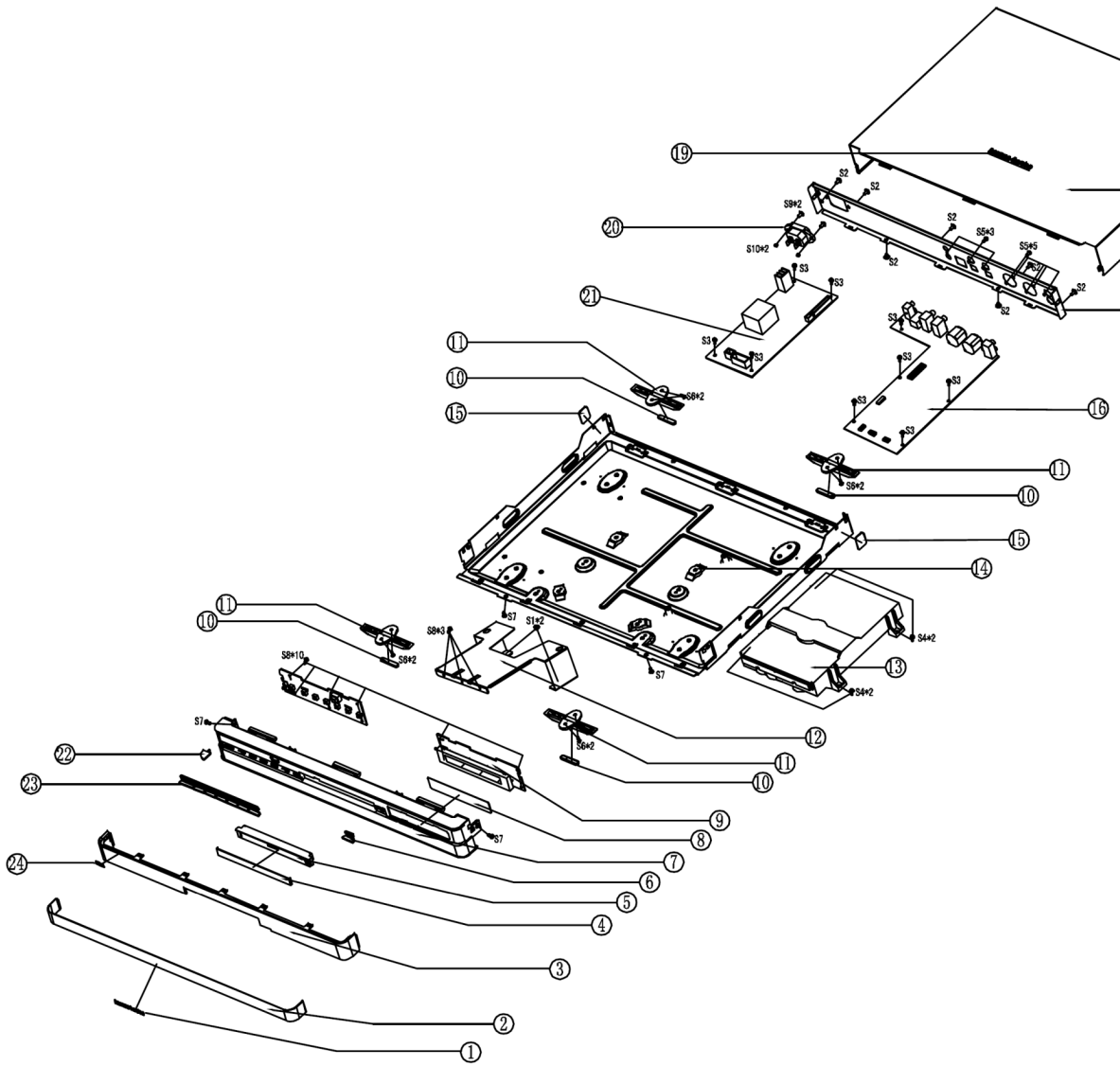

Item	Part Number	Description	Qty
1	0100 SB E128	Metal logo: 52*5.2mm (with single side glue)	1
2	0100 WJ TJ HD980 E005	Aluminum veneer	1
3	0100 SJ HD980 E007	Lens	1
4	0100 WJ TJ HD980 E006	Aluminum wrap for disc tray	1
5	0100 SJ HD980 E009	Disc tray door	1
6	0100 SJ HD980 E005	Button set	1
7	0100 SJ HD980 E003	Front panel	1
8	0100 SJ HD980 E008	VFD filter	1
9	0215 HCD08K5576C01	VFD Board	1
10	0100 DP XJ E799	Sponge: 29.7*5.7*2.5mm (with single side glue)	4
11	0100 SJ HD980 E006	Pedestal underlay	4
12	0100 WJ TJ HD980 E004	Front panel bracket	1
13	0115 JX EDV34850	DV34-850 Loader	1
14	0100 WJ TJ HD990 E001	Chassis	1
15	0100 DP XJ E889	Sponge: 15*15*2.7mm (with single side glue) Black	2
16	0211 HCD08M5604C02	Main Board	1
17	0100 WJ TJ HD990 E004	Rear panel	1
18	0100 WJ TJ HD980 E003	Top cover	1
19	0100 SB E129	Metal logo: 73.6*7.4mm (with single side glue)	1
20	0140 CON DC ZE178	Power Jack: WS-044-0	1
21	02.19.HCD06P1254C02	SMPS Board	1
22	01.00.SJ.HD980.E010	Power indicator lampshade	1
23	01.00.SJ.HD980.E004	Button, Eject	1
24	01.00.SB.E162	Metal logo: 13.9*4.75mm (with single side glue)	1
S1	01.00.WJ.JG.E717	Screw: M3*4PWBTTNI	2
S2	01.00.WJ.JG.E403	Screw: M3*6PWBTTO	7
S3	01.00.WJ.JG.E795	Screw: M3*6PWMHNI	9
S4	01.00.WJ.JG.E1042	Screw: 1SZZR-0098H(M3*8,for LG)	4
S5	01.00.WJ.JG.E321	Screw: M3*8PAHO	8
S6	01.00.WJ.JG.E909	Screw: M3*6BBTTO	8
S7	01.00.WJ.JG.E085	Screw: M3*6KBTTNI	4
S8	01.00.WJ.JG.E051	Screw: M2.5*8PWAHNI	13
S9	01.00.WJ.JG.E1083	Screw: M3*10PMHO	2
S10	01.00.WJ.JG.E119	Nut: M3	2

HD990 Block Diagram Architecture

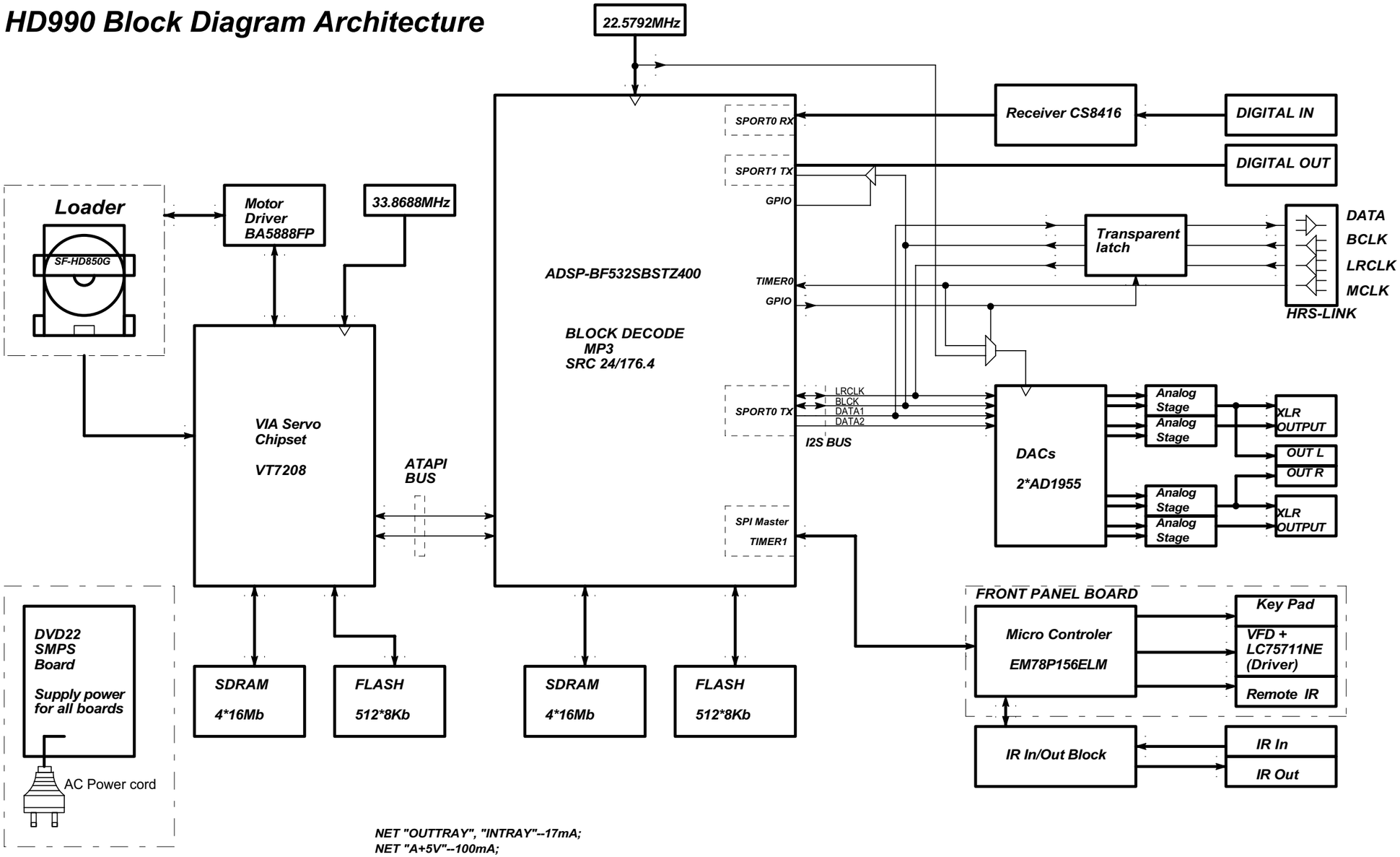

NET "OUTTRAY", "INTRAY"--17mA;
NET "A+5V"--100mA;
NET "+5VSTBY"--100mA;
NET "A+14.5V", "A-14.5V"--100mA;
NET "D+5V", "M+5V"--600~700mA;
NET "D+3.3V"--200~300mA;
NET "LDOCD",
"LDODVD"--30-40mA.

Title	HD990 Block Diagram Architecture	
Size A3	Document Number HD990	Rev
Date: Friday, June 25, 2010	Sheet 1 of 1	

HD990 Electrical Parts List				
Part Number	Description		Qty	Ref. Designator
MAIN PCB				
Resistors				
0157R3E000J	Resistor, chip	0805-0Ω ±5%	16	R149 R154 R167 (R170) R175 (R191) R194 R197 R201 R235 R236 R241 R253 R272 R273 R274
0157R3E1R0J	Resistor, chip	0805-1Ω±5%	4	R204 R205 R206 R207
0157R3E220J	Resistor, chip	0805-22Ω±5%	3	R148 R254 R256
0157R3E330J	Resistor, chip	0805-33Ω±5%	2	R141 R247
0157R3E470J	Resistor, chip	0805-47Ω±5%	17	R90 R91 R92 R95 R97 R102 R110 R125 R126 R127 R128 R130 R131 R136 R137 R268 R275
0157R3E750J	Resistor, chip	0805-75Ω±5%	1	R85
0157R3E101J	Resistor, chip	0805-100Ω±5%	14	R88 R94 R96 R99 R150 R153 R162 R163 R164 R183 R184 R215 R216 R225
0157R3E151J	Resistor, chip	0805-150Ω±5%	1	R265
0157R3E241J	Resistor, chip	0805-240Ω±5%	5	R83 R165 R180 R181 R220
0157R3E271F	Resistor, chip	0805-270Ω±1%	1	R109
0157R3E391F	Resistor, chip	0805-390Ω±1%	3	R117 R166 R214
0157R3E511F	Resistor, chip	0805-510Ω±1%	2	R219 (R224)
0157R3E561J	Resistor, chip	0805-560Ω±5%	5	R186 R187 R210 R259 R260
0157R3E102J	Resistor, chip	0805-1KΩ±5%	6	R115 R138 R139 R140 R208 R239
0157R3E152J	Resistor, chip	0805-1.5KΩ±5%	2	R178 R189
0157R3E202J	Resistor, chip	0805-2KΩ±5%	2	R246 R248
0157R3E222J	Resistor, chip	0805-2.2KΩ±5%	4	R157 R193 R195 R199
0157R3E272J	Resistor, chip	0805-2.7KΩ±5%	7	R84 R211 R213 R226 R263 R212 (R227)
0157R3E272J	Resistor, chip	0805-2.7KΩ±5%	1	R264
0157R3E332J	Resistor, chip	0805-3.3KΩ±5%	1	R93
0157R3E472J	Resistor, chip	0805-4.7KΩ±5%	8	R112 R118 R142 R179 R190 R222 R244 R267
0157R3E512J	Resistor, chip	0805-5.1KΩ±5%	1	R202
0157R3E622F	Resistor, chip	0805-6.2KΩ±1%	1	R249
0157R3E822F	Resistor, chip	0805-8.2KΩ±1%	3	R200 R203 R266
0157R3E103J	Resistor, chip	0805-10KΩ±5%	35	(R86) R87 R89 R114 R120 R122 R123 R132 R133 (R134) R135 R143 R144 R145 R146 R147 R152 R155 R156 (R161) R168 R171 R173 R176 R185 R217 R218 R221 R223 R232 R238 R242 R243 R245 R276
0157R3E1182F	Resistor, chip	0805-11.8KΩ±1%	2	R255 R257
0157R3E223J	Resistor, chip	0805-22KΩ±5%	2	R182 R192
0157R3E333J	Resistor, chip	0805-33KΩ±5%	2	R250 R251
0157R3E473J	Resistor, chip	0805-47KΩ±5%	2	R196 R198
0157R3E104J	Resistor, chip	0805-100KΩ±5%	4	R151 R169 R172 R174
0157R3E105J	Resistor, chip	0805-1MΩ±5%	2	R177 R188
0157R4E560J	Resistor, chip	1206-56Ω±5%	4	R10 R31 R51 R72
0157R4E101F	Resistor, chip	1206-100Ω±1%	4	R9 R30 R50 R71
0157R4E331F	Resistor, chip	1206-330Ω±1%	24	R1 R2 R7 R13 R18 R19 R22 R23 R28 R34 R39 R40 R42 R43 R48 R54 R59 R60 R63 R64 R69 R75 R80 R81
0157R4E511F	Resistor, chip	1206-510Ω±1%	4	R12 R33 R53 R74
0157R4E681F	Resistor, chip	1206-680Ω±1%	8	R4 R16 R25 R37 R45 R57 R66 R78
0157R4E821F	Resistor, chip	1206-820Ω±1%	4	R5 R26 R46 R67
0157R4E222F	Resistor, chip	1206-2.2KΩ±1%	8	R6 R15 R27 R36 R47 R56 R68 R77
0157R4E272F	Resistor, chip	1206-2.7KΩ±1%	10	R8 R11 R21 R29 R32 R49 R52 R62 R70 R73
0157R4E153F	Resistor, chip	1206-15KΩ±1%	7	R3 R24 R44 R65 R158 R159 R160
0157R4E473F	Resistor, chip	1206-47KΩ±1%	12	R14 R17 R20 R35 R38 R41 R55 R58 R61 R76 R79 R82
0157R4E475J	Resistor, chip	1206-4.7MΩ±5%	1	R116
0157R8EP3304	Resistor, thick film chip network	0603-33Ω*4 ±5%	7	RN2 RN3 RN4 RN5 RN6 RN7 RN8
Capacitors				
0154CS3E4P7N50V	Capacitor, multilayer cer, chip	0805-4.7P NPO±5%/50V	1	C61
0154CS3E100N50V	Capacitor, multilayer cer, chip	0805-10P NPO±5%/50V	6	(C62) C63 (C75) (C76) (C77) (C79)
0154CS3E150N50V	Capacitor, multilayer cer, chip	0805-15P NPO±5%/50V	2	(C152) (C160)
0154CS3E470N50V	Capacitor, multilayer cer, chip	0805-47P NPO±5%/50V	2	C146 C187
0154CS3E101N50V	Capacitor, multilayer cer, chip	0805-100P NPO±5%/50V	5	C94 C96 C121 C122 C126
0154CS3E121N50V	Capacitor, multilayer cer, chip	0805-120P NPO±5%/50V	1	C141
0154CS3E201N50V	Capacitor, multilayer cer, chip	0805-200P NPO±5%/50V	1	C147
0154CS3E391N50V	Capacitor, multilayer cer, chip	0805-390P NPO±5%/50V	2	C89 C90
0154CS3E471N50V	Capacitor, multilayer cer, chip	0805-470P NPO±5%/50V	2	C92 C93
0154CS3E681N50V	Capacitor, multilayer cer, chip	0805-680P NPO±5%/50V	1	C98

Part Number	Description		Qty	Ref. Designator
MAIN PCB				
0154CS3E102X50V	Capacitor, multilayer cer, chip	0805-102 X7R ±10%/50V	3	C56 C139 C149
0154CS3E332X50V	Capacitor, multilayer cer, chip	0805-332 X7R±10%/50V	3	C142 C143 C150
0154CS3E392X50V	Capacitor, multilayer cer, chip	0805-392 X7R±10%/50V	1	C148
0154CS3E472X50V	Capacitor, multilayer cer, chip	0805-472 X7R±10%/50V	1	(C157)
0154CS3E103X50V	Capacitor, multilayer cer, chip	0805-103 X7R±10%/50V	5	C70 C82 C100 C101 C140
0154CS3E223X50V	Capacitor, multilayer cer, chip	0805-223 X7R±10%/50V	1	C57
0154CS3E273Y50V	Capacitor, multilayer cer, chip	0805-273 Y5V-20+80%/50V	1	C145
0154CS3E473X50V	Capacitor, multilayer cer, chip	0805-473 X7R±10%/50V	1	C95
0154CS3E104Y50V	Capacitor, multilayer cer, chip	0805-104 Y5V+80-20%/50V	103	(C45) C46 C47 (C48) (C49) C50 C51 C52 (C53) C54 (C55) (C58) C59 C60 C68 (C72) (C73) (C74) C81 (C83) (C84) (C85) C86 (C87) C88 (C91) C97 (C99) (C103) (C104) (C105) (C106) (C107) C108 (C109) (C110) (C111) (C112) (C113) (C114) (C115) (C116) (C117) (C118) (C119) (C120) C123 C124 C125 (C127) (C128) (C129) C130 (C131) (C132) (C133) (C134) (C135) (C136) (C137) C138 C144 C151 C153 C154 (C156) C161 C164 C165 C166 C188 C189 C65 C66 C67 C71 C190 C191 C192 C193 C194 C195 C196 C197 C198 C199 C200 C201 C202 C203 C204 C205 C206 C207 C208 C209 C210 C211 C212 C213 C214 C215 C216
0154CS3E105Y16V	Capacitor, multilayer cer, chip	0805-105 Y5V-20+80%/16V	6	(C69) C80 C158 C159 C162 C163
0154CS3E475Y16V	Capacitor, multilayer cer, chip	0805-475 Y5V+80-20%/16V	1	C155
0154CS4E104X50V	Capacitor, multilayer cer, chip	1206-104 X7R±10%/50V	24	C1 C2 C6 C8 C9 C10 C11 C13 C14 C15 C16 C21 C23 C24 C28 C30 C31 C32 C33 C35 C36 C37 C38 C43
0134CLDE10U16VC	Capacitor, AL.electrolytic	CD110-10UF/16V 5*11	1	CE53
0134CLDE47U25VC1	Capacitor, AL.electrolytic	CD110-47UF/25V 5*11	20	CE1 CE2 CE3 CE4 CE5 CE6 CE7 CE8 CE9 CE10 CE11 CE12 CE13 CE14 CE15 CE16 CE17 CE18 CE48 CE50
0134CLDE47U50VCD	Capacitor, AL.electrolytic	CD110-47UF/50V 6.3*12	11	CE19 CE21 CE22 CE23 CE24 CE25 CE26 CE27 CE28 CE29 CE30
0134CLDE220U10VD	Capacitor, AL.electrolytic	CD110-220UF/10V 5*12	25	CE33 CE41 CE43 CE46 CE49 CE20 CE31 CE32 CE34 CE35 CE36 CE37 CE38 CE39 CE40 CE42 CE44 CE45 CE57 CE58 CE59 CE60 CE61 CE62 CE52
0134CLDEH470U35VG	Capacitor, AL.electrolytic 105℃(M)	CD288H-470UF/35V 10*20	2	CE47 CE51
0100CDDLE33263V	Metallized Polyester Film Capacitor	332/63V	4	C183 C184 C185 C186
0100CDDLE10463V	Metallized Polyester Film Capacitor	104/63V	4	C167 C173 C176 C181
0100CDDLE68163V	Metallized Polyester Film Capacitor	681/63V	8	C168 C169 C171 C174 C178 C179 C180 C182
0100CDDLE22250V	Metallized Polyester Film Capacitor	222/50V	4	C170 C172 C175 C177
Semiconductors				
0141DPSE5819	Schottky Rectifier, Rohm	5819 1A SCHOTTKY, SS14	1	D22
0141DPSELL4148	Diode	LL4148, DO-213AA	14	D1 D2 D3 D4 D5 D6 D7 D8 D9 D10 D11 D12 D13 D21
0141DPSE30BQ040	Schottky Rectifier, IR	30BQ040 3A, SMC	4	D14 D15 D16 D20
0141DFSE019	LED, BRIGHTEK	1SA1206V31C0CAE1(Red), SMD	3	D17 D18 D19
0141DWSE6V2	Zener diode	6.2V 0.4W, SMD	1	DZ1
0142QSE123	MOSFET, DIODES	BSS123, SOT-23	1	MQ1
0142QSE1035	Transistor,Panasonic	2SA1035, SOT-23	17	Q1 Q2 Q4 Q6 Q9 Q10 Q12 Q14 Q17 Q18 Q20 Q22 Q25 Q26 Q28 Q30 Q33
0142QSE2406	Transistor,Panasonic	2SC2406, SOT-23	16	Q3 Q5 Q7 Q8 Q11 Q13 Q15 Q16 Q19 Q21 Q23 Q24 Q27 Q29 Q31 Q32
0142QSE1132	Transistor, ROHM	2SB1132, MPT3	2	Q43 Q44
0142QSE1664T	Transistor, ROHM	2SD1664T100R, MPT3	2	Q34 Q35
0142QSE3018	MOSFET,ROHM	2SK3018T106, MPT3	2	MQ2 MQ3
0142QDE8050	Transistor	KTC8050-C/P, TO-92	2	Q38 Q39
0142QDE8550	Transistor	KTC8550-C/P, TO-92	2	Q36 Q37
0142QSEBCP5616	Transistor, NXP	BCP56-16, SOT223	2	Q40 Q41
0142QSEBCP5316	Transistor, NXP	BCP53-16, SOT223	1	Q42
0144ICSEBF532S	IC, ADI, Blackin DSP	ADSP-BF532SBSTZ400,LQFP176	1	U22
0146ICE7208G	IC, Via, Servo chip	VT7208G, LQFP216	1	U36
0146ICEKH29LV040	IC, KH,Flash Memory	KH29LV040CQC-70G, PLCC32	1	U23
0146ICE290011	IC, AMIC, Flash memory	A290011TL-70, PLCC32	1	U37
ICHY57V641620ETP7	IC, Hynix, SDRAM	HY57V641620ETP-7,TSOP54	1	U24
ICEM11B416256A25	IC, EliteMT, DRAM	M11B416256A-25J,SOJ40	1	U38
0144ICSE5888	IC, Rohm, Actuator driver	BA5888FP, HSOP-28	1	U28

Part Number	Description		Qty	Ref. Designator
MAIN PCB				
0144ICSE1955	IC,ADI, DAC	AD1955, SSOP28	2	U11 U3
0146ICE7414	IC, Philips, Hex inverting Schmitt trigger	74HCT14D,SOIC14	1	U39
0144ICSE74LVC125	IC, TI, quadruple Bus Buffer Gate	SN74LVC125ADR, SOIC14	1	U12
0146ICESN74LV74DR	IC, TI, D-Type Trigger	SN74LV74ADR, SOIC8	1	U40
0146ICE74HCT245	IC,TI,TTL input buffer	SN74HCT245PWR,TSSOP20	1	U26
ICESN74LVC244APWR	IC, TI, Octal Buffers/Drives	SN74LVC244APWR, TSSOP20	1	U41
0144ICDEPC817C	IC, Sharp, Photoelectric Coupler	PC817C,DIP4	1	U20
0144ICSE1117	IC, AAC, LDO	AZ1117H-ADJ, SOT-223	2	U30 U32
0144ICSEA11173V3	IC, AAC, LDO	AZ1117H-3.3, SOT-223	1	U29
0144ICSELM393	IC, ST, Comparator	LM393, SOP8	1	U27
0144ICSETL072CD	IC, TI, opamp	TL072CD, SOIC8	2	U8 U4
ICSETPS73033DBVR	IC, TI, LDO	TPS73033DBVR, DBV5	1	U17
0144ICSE9022	IC, NS, Vacuum Fluorescent Display Filament Driver	LM9022, SO8	1	U25
0144ICSE3522	IC, AAT, Reset monitor	AAT3522, SOT_23	1	U31
0146ICECS8416CZZ	IC, Cirrus Logic, Digital Audio Interface Receiver	CS8416-CZZ, TSSOP28	1	U10
0146ICEAD8663ARZ	IC, ADI, opamp	AD8663ARZ, SOIC8	3	U33 U34 U35
0146ICEICS83905AGT	IC, ICS, Crystal Interface-TO-LVCMOS/LVTTL Fanout Buffer	ICS83905AGT, TSSOP16	1	U14
0144ICSE2134	IC, TI, opamp	OPA2134UA, SOIC8	2	U2 U6
0144ICSE275	IC, ADI, opamp	OP275GS, SOIC8	2	U1 U5
ICESN65LVDS2DBVR	IC, TI, Differential Receiver	SN65LVDS2DBVR, DBV5	1	U15
Miscellaneous				
0113LZESB100	Bead, chip	0805-100Ω±5%	3	R98 R100 R101
0113LLSE007	Inductor, multilayer cer, chip	0805-10UH, SMD	2	L5 L6
0113LLSE362	Inductor,Weifengda	WBR453232-220K-R, SMD1812	2	L2 L1
0113LLDE081	Inductor, Coilcraft	WB1010-1, DIP6	3	T1 T2 T3
0113LLDE081	Inductor, Coilcraft	WB1010-1, DIP6	2	T4 T5
0113LLSE382	Inductor, TDK	1812-47UH, SMD1812	2	L4 L3
0113LZESC100	Bead, chip,	1206-100Ω, SMD	14	FB1 FB2 FB3 FB4 FB5 FB6 FB7 FB8 FB9 FB10 FB11 FB12 FB13 FB14
0100ZJBHQE008	Relay, HongFa	HFD27/005-S(555), DIP	2	K2 K1
0100JZE33868	Quartyz Crystal Unit	33.8688MHZ-49S-20P	1	Y2
0100JZE225792A	Quartyz Crystal Unit	22.5792MHz-49S-10PF ±10PPM DIP	1	Y1
0140CONDCZE121	Jack, IR in/out jack	SCJ351P00XS0B00 (BLACK), In-line Package	1	JP7
0140CONDCZE046	Jack, Audio output jack	AV2-8.4-1G Antiflaming	1	JP1
0140CONDPHE000	Connector	PH-2A Antiflaming	1	CN7
0140CONDPHE024	Connector	PH-5A Antiflaming	1	CN3
0140CONDPHE028	Connector	PH-6A Antiflaming	1	CN4
0140CONDPHE047	Connector	PH-13A Antiflaming	1	CN5
0140CONS05E007	FPC connector	FPC-0.5-24P with upward touch	1	CN2
0140CONS13FPC2E002	FPC connector	1.25-14P	1	CN1
0140CONDCZE808	HRS-Link Jack	PCB-109 DIP	1	JP6
0140CONDDZEHDY9M4	XLR Jack	HDY-9M-4 DIP	2	JP2 JP3
0502231000001	AV&Optical Jack Combined with Toshiba optical jack TORX177PL.	H-GQ+RCA1,DIP	1	JP4
0502230900001	Fiber optic Receiving Jack	TORX177PL(F,T),5.0V,15Mb/s,DIP	1	JP4
0140CONDCZE800	AV/Optical Output Jack	TC58-655-02G DIP	1	JP5
VFD Board				
0157R3E103J	Resistor, chip	0805-10KΩ±5%	1	(R415)
0157R3E203J	Resistor, chip	0805-20KΩ±5%	1	(R414)
0154CS3E300N50V	Capacitor, multilayer cer, chip	0805-30P NPO±5%/50V	1	(C411)
0154CS3E473X50V	Capacitor, multilayer cer, chip	0805-473 X7R±10%/50V	2	(C407) (C415)
0154CS3E104Y50V	Capacitor, multilayer cer, chip	0805-104 Y5V+80-20%/50V	2	(C408) (C409)
0154CS3E225Y16V	Capacitor, multilayer cer, chip	0805-225 Y5V-20+80%/16V	1	(C410)
0134CLDE47U16VB	Capacitor, AL.electrolytic	CD11X-47UF/16V 5*7	1	(CE403)
0141DPSELL4148	Diode	LL4148 SMD	1	(D402)
0144ICSE75711	IC, SANYO, VFD Driver	LC75711NE,QFP64E	1	(U402)
0116E1302FA	VFD	VFD22-1302FA	1	VFD401
0139SWQCED665A	Touch switch	6*6*5(80g)	1	K408
0140CONS13AY1E011	Connector	1.25-6A(Horizontal Type)	1	(CN403)
CONS13FPC2E002	FPC connector	1.25-14P(Vertical Type and Single Contact)	1	(CN401)

Part Number	Description		Qty	Ref. Designator
Key Board (5575C01)				
0157R3E000J	Resistor, chip	0805-0Ω ±5%	1	R414 R415
0157R3E471J	Resistor, chip	0805-470Ω±5%	2	R404 R412
0157R3E272J	Resistor, chip	0805-2.7KΩ±5%	1	R413
0157R3E472J	Resistor, chip	0805-4.7KΩ±5%	8	R402 R403 R406 R407 R408 R409 R410 R411
0157R3E153J	Resistor, chip	0805-15KΩ±5%	1	R401
0154CS3E220N50V	Capacitor, multilayer cer, chip	0805-22P NPO±5%/50V	2	C402 C403
0154CS3E104Y50V	Capacitor, multilayer cer, chip	0805-104 Y5V+80-20%/50V	3	C404 C405 C406
0154CS3E225Y16V	Capacitor, multilayer cer, chip	0805-225 Y5V-20+80%/16V	1	C401
0134CLDE100U10VA	Capacitor, AL.electrolytic	CDV-100UF/10V 5*5	2	CE401 CE402
0141DPSELL4148	Diode	LL4148 SMD	1	D401
E1L134XA22E0CC201	LED,DIP	1L134XA22E0CC201(1.3*3.5*3.5mm,1.7-2.4V,30mA,orange color,DIP)	1	LED402
E1L134FW31B0CC201	LED,DIP	1L134FW31B0CC201(1.3*3.5*3.5mm,2.8-3.8V,30mA,white color,DIP)	1	LED403
0142QSE8050	Transistor	KTC8050 SMD SOT-23	1	Q402
0142QSEC8550	Transistor	KTC8550 SMD SOT-23	1	Q401
0100JZE04000	Quartyz Crystal Unit	4.000MHZ-49S-22P	1	Y401
0146ICE78P156	IC, ELAN, MCU	EM78P156ELM,SOIC18	1	U401
0144ICDE0038B	IC, IR receiver	HS0038B	1	IR401
0139SWQCED665A	Touch switch	6*6*5(80g)	7	K401 K402 K403 K404 K405 K406 K407
0140CONS13AY1E011	Connector	1.25-6A(Horizontal Type)	1	(CN403)
0140CONDTJE024	Connector	TJC3-3A Antiflaming	1	(CN404)
SMPS Board (1254C02)				
Resistors				
0157RCED100	FIXED CARBON FILM	RT1/4W-10Ω	2	R4,R6
0157RCED470	FIXED CARBON FILM	RT1/4W-47Ω	1	R21
0157RCED101	FIXED CARBON FILM	RT1/4W-100Ω	1	R16
0157RCED221	FIXED CARBON FILM	RT1/4W-220Ω	3	R13,R19,R20
0157RCED681	FIXED CARBON FILM	RT1/4W-680Ω	1	R14
0157RCED102	FIXED CARBON FILM	RT1/4W-1KΩ	1	R26
0157RCED222	FIXED CARBON FILM	RT1/4W-2.2KΩ	3	R17,R18,R22
0157RCED512	FIXED CARBON FILM	RT1/4W-5.1KΩ	3	R23,R24,R25
0157RCED103	FIXED CARBON FILM	RT1/4W-10KΩ	1	R15
0157RCED473	FIXED CARBON FILM	RT1/4W-47KΩ	1	R5
0157RCEF683	FIXED CARBON FILM	RT1W-68KΩ 5%	1	R2
0157RCEF364	FIXED CARBON FILM	RT1W-360KΩ	1	R3
0157RCED105	FIXED CARBON FILM	RT1/4W-1MΩ	1	R1
Capacitors				
0100CDGYE104275V	High-voltage metallized polyester film	104/275V X2(lead pitch: 15mm)	1	CX1
0100CDGYE471400V	High-voltage metallized polyester film	471/400V Y1(lead pitch:10mm)	2	CY1,CY2
0100CDGYE102400V	High-voltage metallized polyester film	102/400V Y1(lead pitch:10mm)	1	CY3
0100CDCPE1031KV	High-voltage metallized polyester film	103/1KV(lead pitch:7.5mm)	1	C1
0100CDDSE473/50V	RADIAL LEADS MLCC	473/50V X7R±10% (lead pitch:5.08mm)	2	C2,C13
0100CDDSE683	RADIAL LEADS MLCC	683/50V X7R±10% (lead pitch:5.08mm)	1	C3
0100CDDSE10450V	RADIAL LEADS MLCC	104/50V X7R±10% (lead pitch:5.08mm)	6	C10 C11 C12 C14 C15 C16
0134CLDE4U7160VD	CAPACITOR,AL.ELECTROLYTIC	CD288H-4.7UF/160V 8*12	1	EC3
0134CLDEH2U250VC	CAPACITOR,AL.ELECTROLYTIC	CD288H-2.2UF/50V 5*11	1	EC22
0134CLDEH47U25VD	CAPACITOR,AL.ELECTROLYTIC	KM470M025C110AP	2	EC17,EC18
0134CLDEH47U50VD	CAPACITOR,AL.ELECTROLYTIC	GF470M050E110A	1	EC2
020806000034	CAPACITOR,AL.ELECTROLYTIC	82uF,-20%~+20%,400V,-25C~+105C,D16*H25,DIP	1	EC1
CLDE288100U25VD	CAPACITOR,AL.ELECTROLYTIC	GF101M025E110A	2	EC11,EC12
CLDE288220U16VD	CAPACITOR,AL.ELECTROLYTIC	CD288H-220UF/16V 6.3*12	4	EC5,EC6,EC16,EC21
CLDE288220U25VD	CAPACITOR,AL.ELECTROLYTIC	CD288H-220UF/25V 8*12	4	EC9,EC10,EC14,EC15
0134CLDEH470U16VD	CAPACITOR,AL.ELECTROLYTIC	GF471M016F115A	1	EC4
0134CLDE1000U16VG	CAPACITOR,AL.ELECTROLYTIC	CD288H-1000UF/16V 10*20	2	EC19,EC20
Semiconductors				
0141DPDEIN4001	Diode	IN4001,SOD81	1	D17
0141DPDEIN4007	Diode	IN4007,SOD81	4	D1,D2,D3,D4
0141DPDEFR104	Diode	FR104, In-line Package	5	D6,D8,D10,D11,D13
0141DPDEFR107	Diode	FR107, In-line Package	1	D7
0141DPDEIN4148	Diode	IN4148,DO-35	3	D14,D16,D18
0141DPDE21DQ10	Diode	21DQ10, In-line Package	1	D12
0141DPDE31DQ06	Diode	31DQ06, In-line Package	1	D15

Part Number	Description		Qty	Ref. Designator
SMPS Board (1254C02)				
0141DPDE1U08	Diode	1U08 , In-line Package	1	D5
0141DWDE16V	Zener Diode	16V, In-line Package	1	ZD1
0141DWDE18V	Zener Diode	18V, In-line Package	1	ZD2
0142QDE5551	Transistor	2N5551,TO-92	1	Q1
0142QDE8550	Transistor	KTC8550-C/P,TO-92	1	Q3
0142QDE9014	Transistor	C9014,TO-92	1	Q2
0144ICDEMCR100	Silicon Controlled Rectifiers	MCR100-6,TO-92	1	SC1
0144ICDE2659R	IC, FAIRCHILD, FPS	KA5M02659R, DIP8	1	IC1
0144ICDEAZ431AZ	IC, AAC, Adjustable Shunt Regulator	AZ431AZ-AE1TR, TO-92	1	IC2
0144ICDEBA33	IC, ROHM, Dropout Voltage Regulator	BA33BCO,TO-220	1	IC6
0144ICDELM317T	IC, NS, Positive Adjustable Regulator	LM317T, TO-220	1	IC5
0144ICDEL7805	IC, ST, Voltage Regulator	L7805, TO-220	1	IC3
0144ICDEPC817C	IC, Sharp, Photoelectric Coupler	PC817C, DIP4	1	PH1
Miscellaneous				
0113LLDE090	Pulse transformer,Coilcraft	L520-10UH	1	L7
0113LLDE005	Bead, leaded fixed	LH0810-20UH	1	L6
0113LLDE051	Bead, leaded fixed	LH0608-22UH	4	L3,L4,L5,L8
0113LLDE086	Common Mode Choke	LCL- ET20-010(50MH)	1	LF1
0140CONDCZE131	Fuse Holder	BLX-2A Antiflaming	1	for FU1
0138FUSEDE1A250V	Fuse	T1A/250V	1	FU1
0113LRE059	Switching Power Transformer	BCK-EC2802	1	TR1
0140CONDCZE129	Connector	Vertical VH three holes two pins(white)	2	JP1
0140CONDTJE024	Connector	TJC3-3A Antiflaming	1	CN1
0140CONDTJE002	Connector	TJC3-13A Antiflaming	1	CN2
0100WJTJE496	Radiator	12*16*23mm Antiflaming	1	for IC3
0100WJQTE041	3pins grounding piece	M4	4	G1,G2,G3,G4
0157RRE5D9	Thermistor	NTC-5D-9	1	NTC
0157RYE10K	Varistor	10K.471	1	RV1
Mechanical - Accessories				
0100SJHD980E003	plastic part	HD980-Front panel	1	HD980-RE01
0100SJHD980E004	plastic part	HD980-Button I	1	HD980-RE02
0100SJHD980E005	plastic part	HD980-Button II	1	HD980-RE03
0100SJHD980E006	plastic part	HD980-Pedestal underlay	4	HD980-RE04
0100SJHD980E007	plastic part	HD980-Lens	1	HD980-RE05
0100SJHD980E008	VFD filter	HD980-VFD filter	1	HD980-RE06
0100SJHD980E009	plastic part	HD980-Disc tray door	1	HD980-RE07
0100SJHD980E010	plastic part	HD980-Power indicator lampshade	1	HD980-RE08
0100SJSKE008	plastic part	1000A-IR receiver support 5.5mm	1	
0100FZQTE409	PC piece	HD980-H05	1	Between Lens and Front panel
0100WJTJHD990E001	Metals Part	HD990-Chassis	1	HD990-PT01
0100WJTJHD990E004	Metals Part	HD990-Rear panel For US Version	1	HD990-PT02
0100WJTJHD980E003	Metals Part	HD980-Top cover	1	HD980-PT03
0100WJTJHD980E004	Metals Part	HD980-Front panel bracket	1	HD980-PT04
0100WJTJHD980E005	Metals Part	HD980-Aluminum veneer	1	HD980-PT05
0100WJTJHD980E006	Metals Part	HD980-Aluminum ally wrap for disc tray	1	HD980-PT06
0100WJJGE717	Screw	M3*4PWBTTNI	2	For Front panel bracket and Chassis (2)
0100WJJGE403	Screw	M3*6PWBTTO	7	For Top cover and Chassis(2),Top cover and Rear panel(3),Rear panel and Chassis(2)
0100WJJGE795	Screw	M3*6PWMHNI	9	For Main board and Chassis(5),SMPS board and Chassis(4)
0100WJJGE1042	Screw	1SZZR-0098H(M3*8,for LG)	4	For Loader and Chanssis(4)
0100WJJGE321	Screw	M3*8PAHO	8	For the jacks on main board and Rear panel(8)
0100WJJGE909	Screw	M3*6BBTTO	8	For Pedestal underlay and Chassis(8)
0100WJJGE085	Screw	M3*6KBTTNI	4	For Front panel and Chassis(4)
0100WJJGE051	Screw	M2.5*8PWAHNI	13	For Key board and Front panel(6),VFD board and Front panel(4),Front panel bracket and Front panel(3)
0100WJJGE1083	Screw	M3*10PMHO	2	For the Power Jack(2)
0100WJJGE119	Nut	M3	2	For the Power Jack(2)
0100DPXJE799	Sponge	29.7*5.7*2.5mm (with single side glue)	4	HD980-H01
0100DPHME125	Sponge	20*10*2mm (with double sides glue)	3	For VFD(2),Loader flat cable(1)
0100DPHME124	Sponge	20*10*3mm (with single side glue) Black	4	Sticked on Front panel bracket
0100DPHME303	Sponge	20*50*2mm (with single side glue)	1	For Loader flat cable and chassis(1)
0100DPJYE615	Insulated PVC	176.5*84.4*0.5mm (with single side glue)	1	Sticked under SMPS board
0100DPJYE153	Insulated PVC	φ6.6*φ3.6*0.3mm (with single side glue) Black	2	Sticked on Chassis under Loader(1),Sticked on srew pillar on Botton board(1)
0100DPXJE889	Sponge	15*15*2.7mm (with single side glue) Black	2	HD980-H06, Sticked on the flank side of the Chassis
0113LHE020	Magnetism annulus	M248	1	For the Power Connect Cable

Part Number	Description		Qty	Ref. Designator
Mechanical - Accessories				
0100FZQTE122	Plastic fastener	12cm	4	For Power cord (3),Loader connect cable(1)
0100WJTJE569	aluminium fastener	ф3.5*40	2	
0100YSTZTE057	Laser label	Laser precausion guide	1	sticked on Loader
0100YSTZTE068	Laser label	Laser precausion mark	1	sticked on Loader
0147CNTLJX7E768	Connect cable	2.54-3Y-3Y-220mm (Be different side)	1	Connect Key board and SMPS board
0147CNTACXE369	AC Power Cord	SP-021P+SJT 18AWG/2C BK+SP-607 L2.0M		For US Version
0147CNTLJX3E037	Connect cable	2.0-6Y-6Y-130mm (Be different side) (UL20080 28AWG)	1	Connect Loader and Main board
0147CNTLJX3E036	Connect cable	2.0-5Y-5Y-240mm (Be same side) (LG UL20080 28AWG)	1	Connect Loader and Main board
0147CNTLJX7E612	Connect cable	2.54-2.0-13Y-240mm(Be same side)	1	Connect SMPS board and Main board
0147CNTLJX5E333	Connect cable	70mm(solder one end and grounding piece another end)	1	Connect Key board and SMPS board
0147CNTLJX5E334	Connect cable	80mm(solder one end and grounding piece another end)	1	Connect VFD board and Main board
0147CNTLJX2E110	Connect cable	1.25-6Y-6Y-180mm(Be same side)	1	Connect Key board and VFD board
0147CNTLJX7E819	Connect cable	VH-3Y-2Y-400mm(Be same side)	1	Connect SMPS board and Power Jack(solder one end)
0148BPX1E139	flat cable	1.25*14P*80mmA	1	Connect Main board and VFD board
0148BPX1E045	flat cable	0.5*24P*180mmA	1	Connect Loarder and Main board
0115JXEDV34850	Loader	DV34-850	1	SF-HD850G+DVD-M06B
0140CONDCZE178	Power Jack	WS-044-0	1	
0100SBE162	Metal logo	HD990 13.9*4.75mm (with single side glue)	1	HD990-H01,sticked on Lens
0100SBE128	Metal logo	52*5.2mm (with single side glue)	1	HD980-H03,sticked on Aluminum veneer
0100SBE129	Metal logo	73.6*7.4mm (with single side glue)	1	HD980-H04,sticked on Top cover
	Limited Warranty Card	harman/kardon(US version)	1	For US Version
	Safety Precautions Card	harman/kardon(US version)	1	For US Version
	Owner manual	HD990	1	For US Version
0100BZXWE2525	Carton box	HD990	1	For US Version
0100DPQTE443	Polyfoam	HD990-Front	1	
0100DPQTE444	Polyfoam	HD990-Left	1	
0100DPQTE445	Polyfoam	HD990-Right	1	
0100DPQTE446	Polyfoam	HD990-Accessorial	1	
	Plastic bag	52*50cm	1	For Unit packing
	Plastic bag	11*28cm	1	For Power cord packing
	Plastic bag	25*35cm	1	For Owner manual packing
	Plastic bag	6*23cm	2	For Audio cable and Remote control transmission cable packing
	Plastic bag	8.4*24cm	1	For Remote control packing
	Plastic bag	7.5*8cm	1	For Battery packing
	Plastic bag	16.5*24.5cm	1	For Accessories packing
0211HCD08M5604C02	Main Board	HCD08M-5604C02	1	2-layers For US Version
0215HCD08K5575C01	Key Board	HCD08K-5575C01	1	2-layers
0215HCD08K5576C01	VFD Board	HCD08K-5576C01	1	2-layers
0219HCD06P1254C02	SMPS Board	HCD06P-1254C02	1	1-layer For US Version
0225HD990	Remote Control	HD990	1	

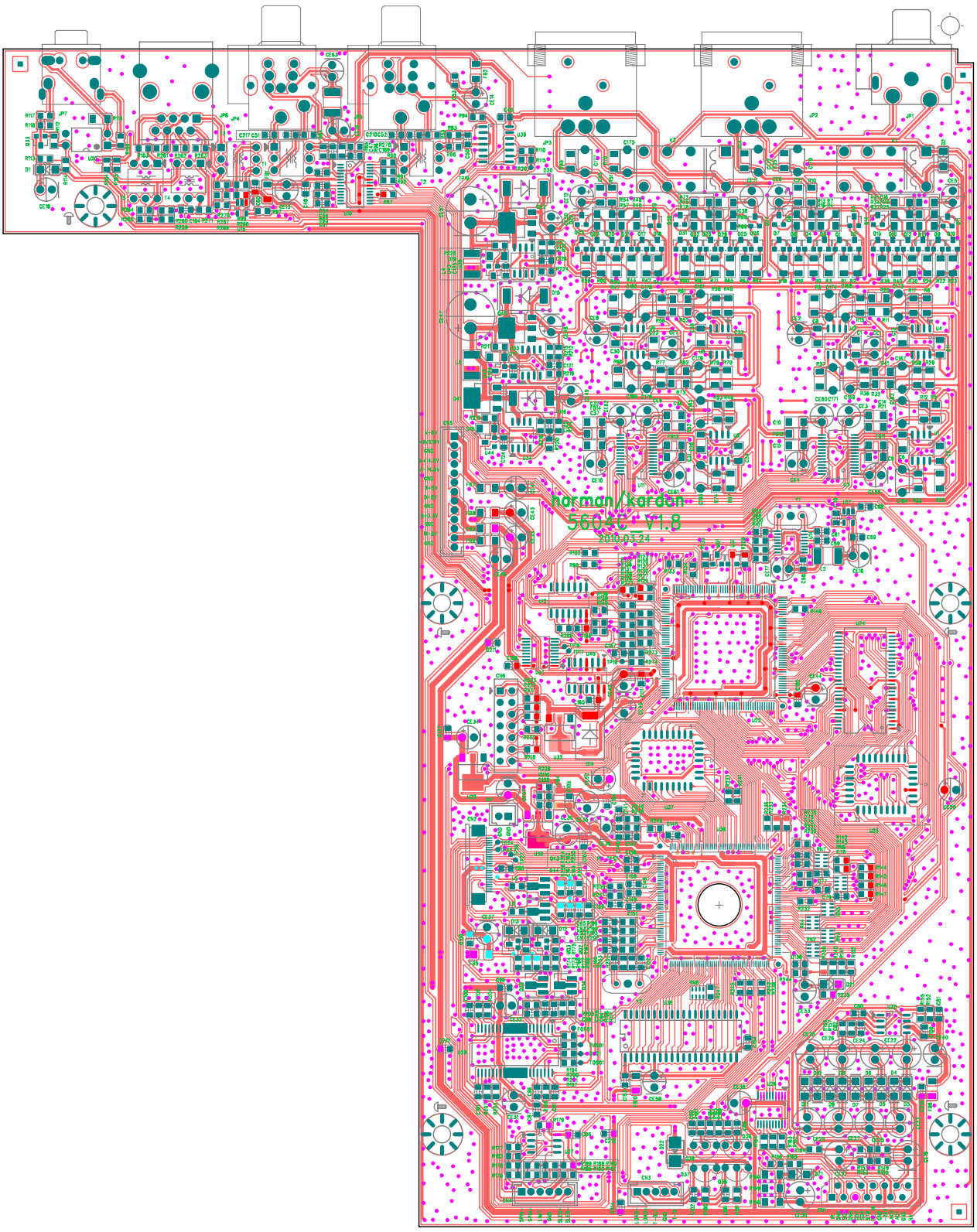
harman/kardon
5604C V1.8
2010.03.24

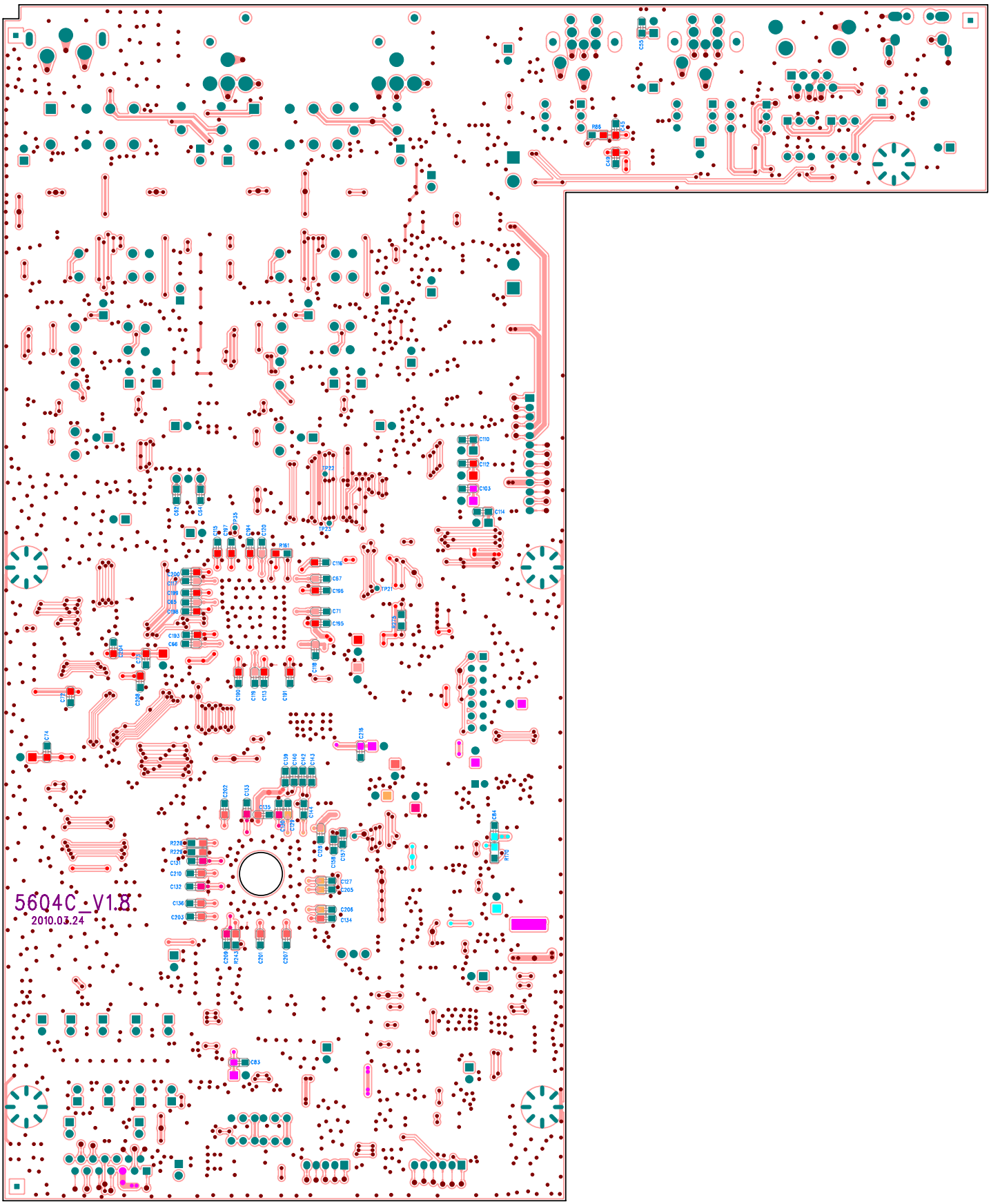
5604C_V1.8
2010.03.24

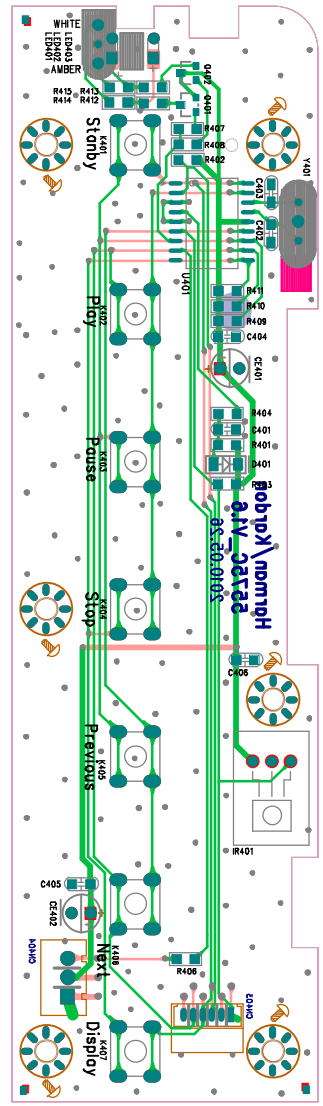

5575C V1.4-2008.12.06.p - Thu Jul 08 12:28:24 2010

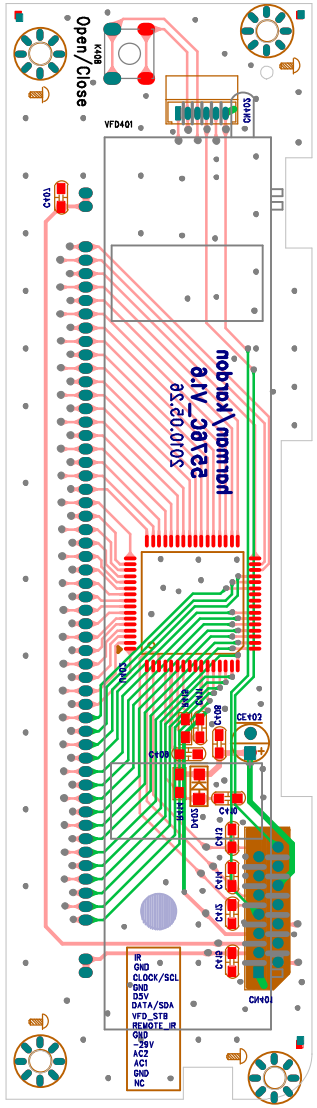

5576C V1.2 2008.02.23.p - Thu Jul 08 12:29:52 2010

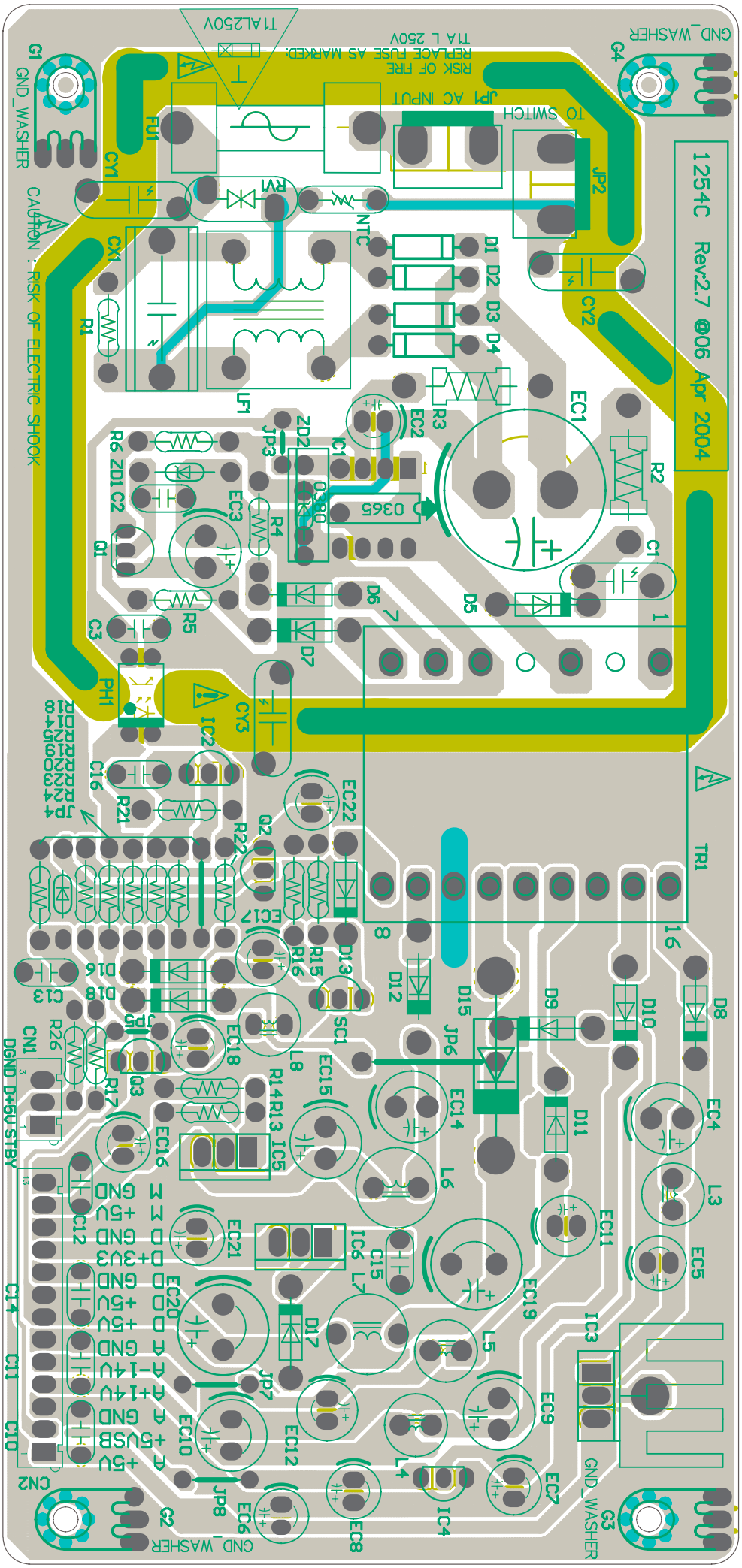
1254C Rev.2.7 @06 Apr 2004
T1AL250V
T1A L 250V
RISK OF FIRE
REPLACE FUSE AS MARKED:
JP1 AC INPUT
TO SWITCH
GND_WASHER
CAUTION : RISK OF ELECTRIC SHOCK
DGND D+5V STBY
FU1
CY1
CY2
CY3
CX1
RY1
NTC
LF1
JP2
JP3
JP4
JP5
JP6
JP7
JP8
PH1
TR1
CN1
CN2
G1
G2
G3
G4

ADSP-BF532SBSTZ400 LQFP176 IC, ADI, Blackin DSP

176-Lead LQFP Pin Assignment (Numerically by Lead Number)

Lead No.	Signal	Lead No.	Signal	Lead No.	Signal	Lead No.	Signal	Lead No.	Signal
1	GND	41	GND	81	TX	121	ADDR19	161	$\overline{AMS0}$
2	GND	42	GND	82	RX	122	ADDR18	162	ARDY
3	GND	43	GND	83	$\overline{EMU}$	123	ADDR17	163	$\overline{BR}$
4	VROUT1	44	GND	84	$\overline{TRST}$	124	ADDR16	164	SA10
5	VROUT0	45	VDDEXT	85	TMS	125	ADDR15	165	$\overline{SWE}$
6	VDDEXT	46	PF5	86	TDI	126	ADDR14	166	$\overline{SCAS}$
7	GND	47	PF4	87	TDO	127	ADDR13	167	$\overline{SRAS}$
8	GND	48	PF3	88	GND	128	GND	168	VDDINT
9	GND	49	PF2	89	GND	129	GND	169	CLKOUT
10	CLKIN	50	PF1	90	GND	130	GND	170	GND
11	XTAL	51	PF0	91	GND	131	GND	171	VDDEXT
12	VDDEXT	52	VDDINT	92	GND	132	GND	172	$\overline{SMS}$
13	$\overline{RESET}$	53	SCK	93	VDDEXT	133	GND	173	SCKE
14	NMI	54	MISO	94	TCK	134	VDDEXT	174	GND
15	GND	55	MOSI	95	BMODE1	135	ADDR12	175	GND
16	RTXO	56	GND	96	BMODE0	136	ADDR11	176	GND
17	RTXI	57	VDDEXT	97	GND	137	ADDR10		
18	VDDRTC	58	DT1SEC	98	DATA15	138	ADDR9		
19	GND	59	DT1PRI	99	DATA14	139	ADDR8		
20	VDDEXT	60	TFS1	100	DATA13	140	ADDR7		
21	PPI_CLK	61	TSCLK1	101	DATA12	141	ADDR6		
22	PPI0	62	DR1SEC	102	DATA11	142	ADDR5		
23	PPI1	63	DR1PRI	103	DATA10	143	VDDINT		
24	PPI2	64	RFS1	104	DATA9	144	GND		
25	VDDINT	65	RSCLK1	105	DATA8	145	VDDEXT		
26	PPI3	66	VDDINT	106	GND	146	ADDR4		
27	PF15	67	DT0SEC	107	VDDEXT	147	ADDR3		
28	PF14	68	DT0PRI	108	DATA7	148	ADDR2		
29	PF13	69	TFS0	109	DATA6	149	ADDR1		
30	GND	70	GND	110	DATA5	150	$\overline{ABE1}$		
31	VDDEXT	71	VDDEXT	111	VDDINT	151	$\overline{ABE0}$		
32	PF12	72	TSCLK0	112	DATA4	152	$\overline{AWE}$		
33	PF11	73	DR0SEC	113	DATA3	153	$\overline{ARE}$		
34	PF10	74	DR0PRI	114	DATA2	154	$\overline{AOE}$		
35	PF9	75	RFS0	115	DATA1	155	GND		
36	PF8	76	RSCLK0	116	DATA0	156	VDDEXT		
37	PF7	77	TMR2	117	GND	157	VDDINT		
38	PF6	78	TMR1	118	VDDEXT	158	$\overline{AMS3}$		
39	GND	79	TMR0	119	$\overline{BG}$	159	$\overline{AMS2}$		
40	GND	80	VDDINT	120	$\overline{BGH}$	160	$\overline{AMS1}$		

VT7208 LQFP 216

IC, Via, Servo chip

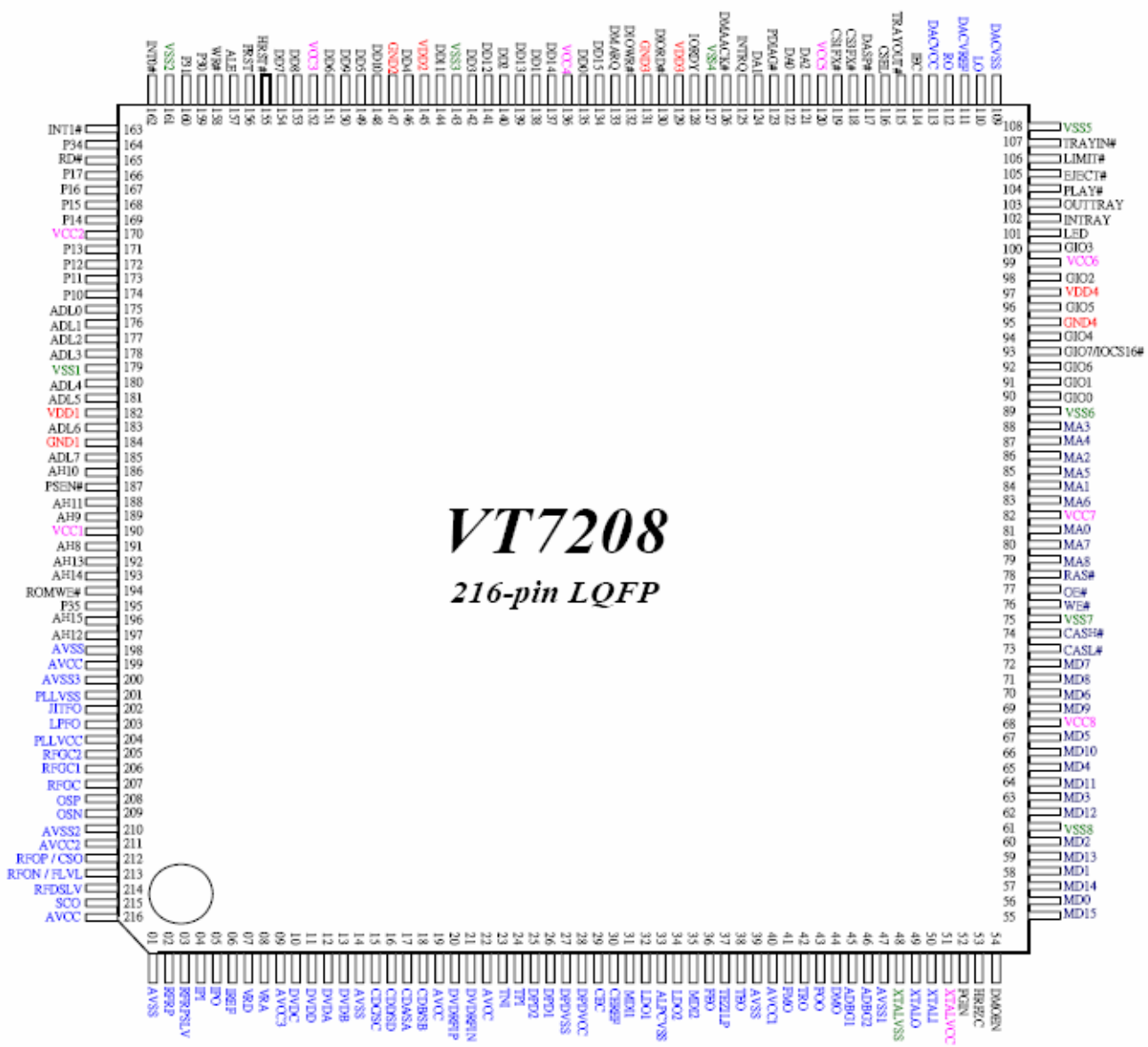

KH29LV040CQC-70G PLCC-32

IC, KH,Flash Memory

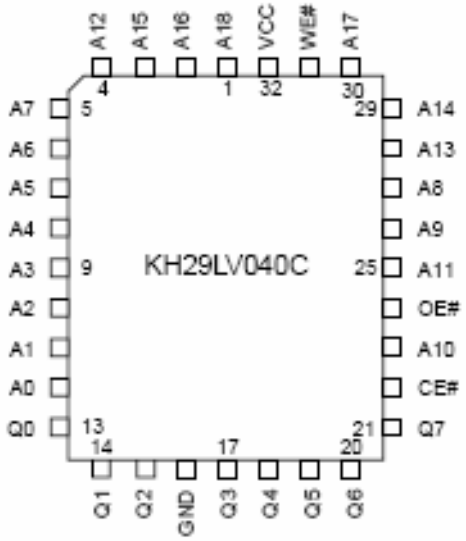

A290011TL-70 PLCC-32

IC, AMIC, Flash memory

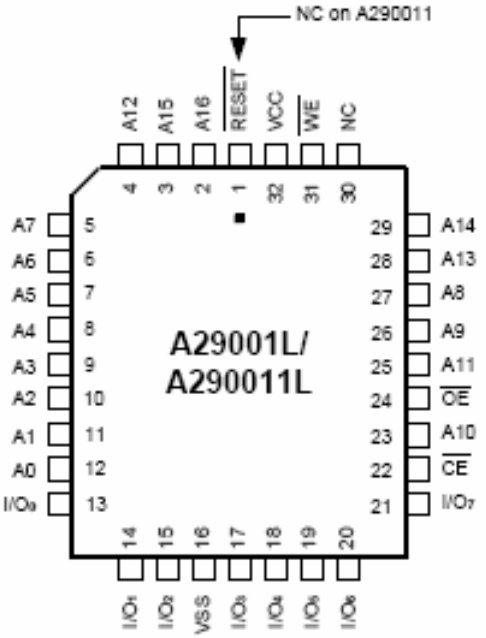

HY57V641620ETP-7 TSSOP-54

IC, Hynix, SDRAM

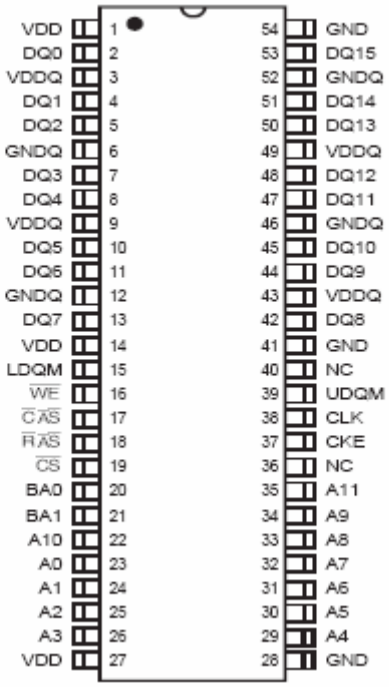

M11B416256A SOJ-40

IC, EliteMT, DRAM

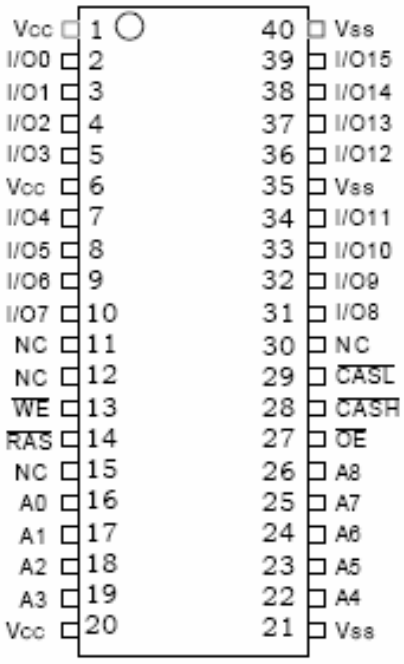

BA5888FP HSOP-28

IC, Rohm, Actuator driver

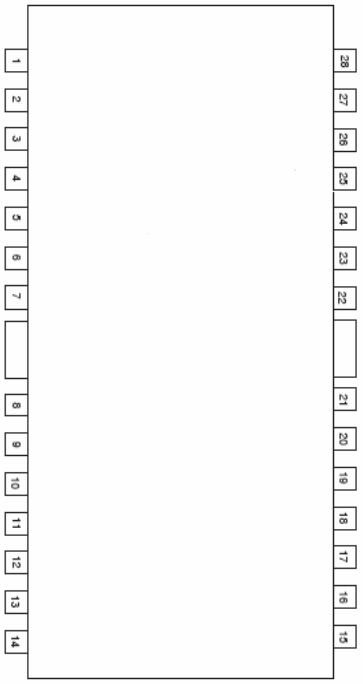

No	Symbol	No	Symbol
1	VINFC	15	VOTK+
2	CFCerr1	16	VOTK-
3	CFCerr2	17	VOLD+
4	VINSL+	18	VOLD-
5	VINSL-	19	PGND
6	VOSL	20	VNFTK
7	VNFFC	21	PVcc2
8	Vcc	22	PreGND
9	PVcc1	23	VINLD
10	PGND	24	CTKerr2
11	VOSL-	25	CTKerr1
12	VOSL+	26	VINTK
13	VOFC-	27	BIAS
14	VOFC+	28	STBY

AD1955 SSOP-28

IC,ADI, DAC

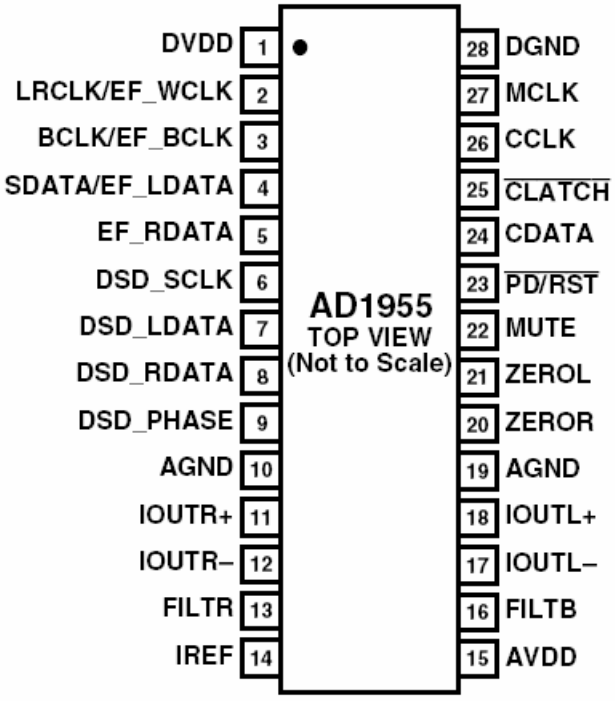

SN74HCT245PWR TSSOP-20

IC,TI,TTL input buffer

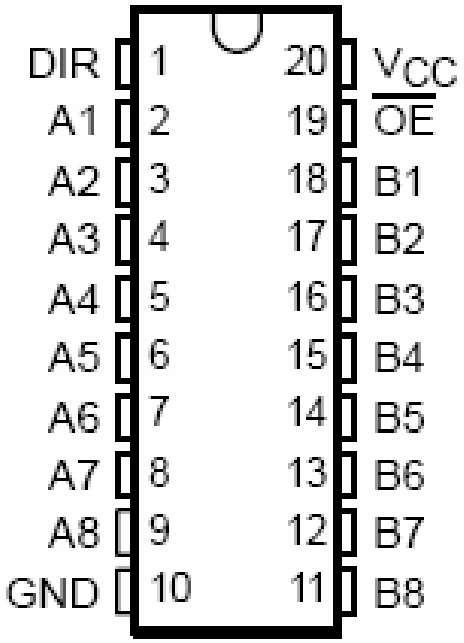

74HCT14D SOIC14 IC, Philips, Hex inverting Schmitt trigger

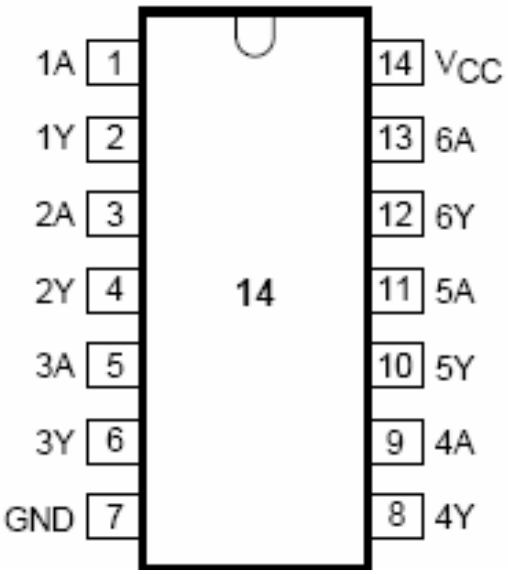

SN74LVC125ADR SOIC8

IC, TI, quadruple Bus Buffer Gate

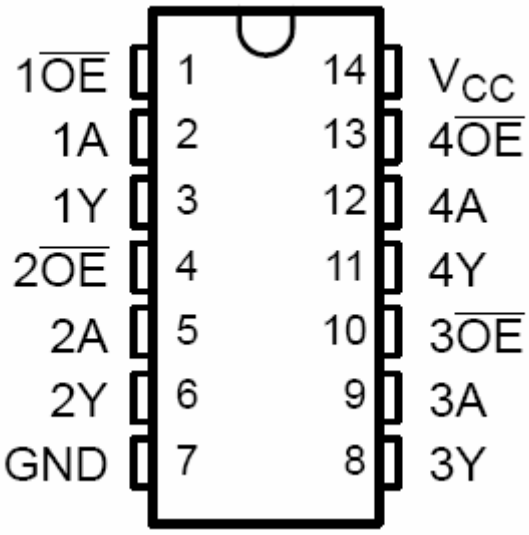

SN74LVC244APWR TSSOP20

IC, TI, Octal Buffers/Drives

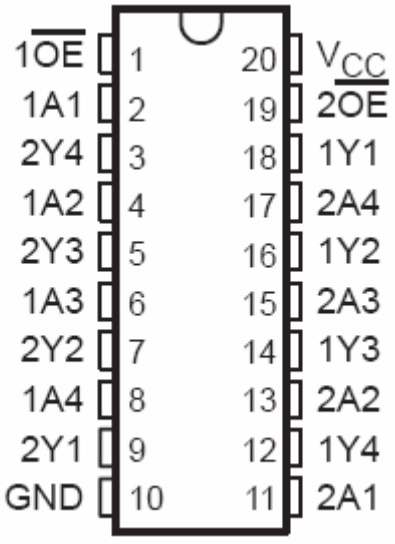

SN74LV74ADR SOIC14

IC, TI, D-Type Trigger

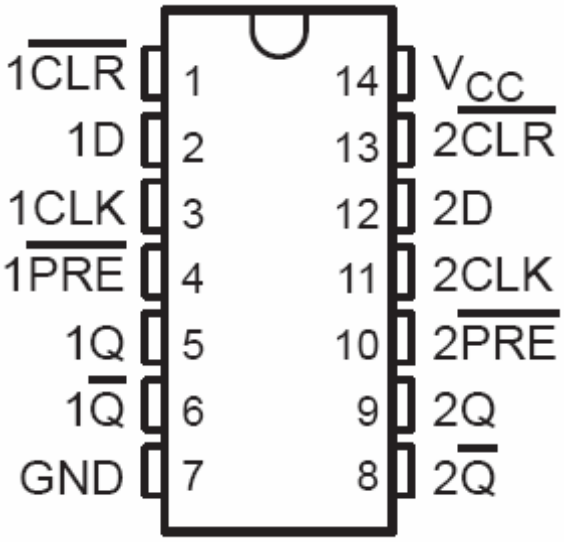

SN65LVDS2DBVR DBV5

IC, TI, Differential Receiver

SN65LVDS2 and SN65LVDT2
DBV Package
(TOP VIEW)

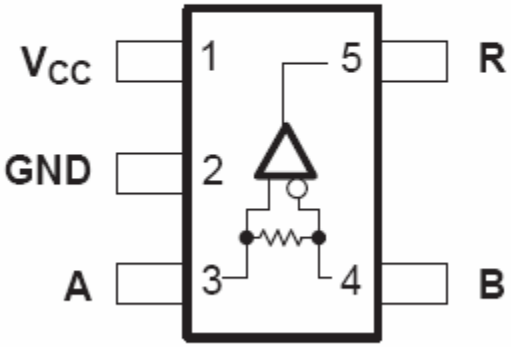

110-Ω Resistor for LVDT Only

CS8416-CZZ TSSOP28

IC, Cirrus Logic, Digital Audio Interface Receiver

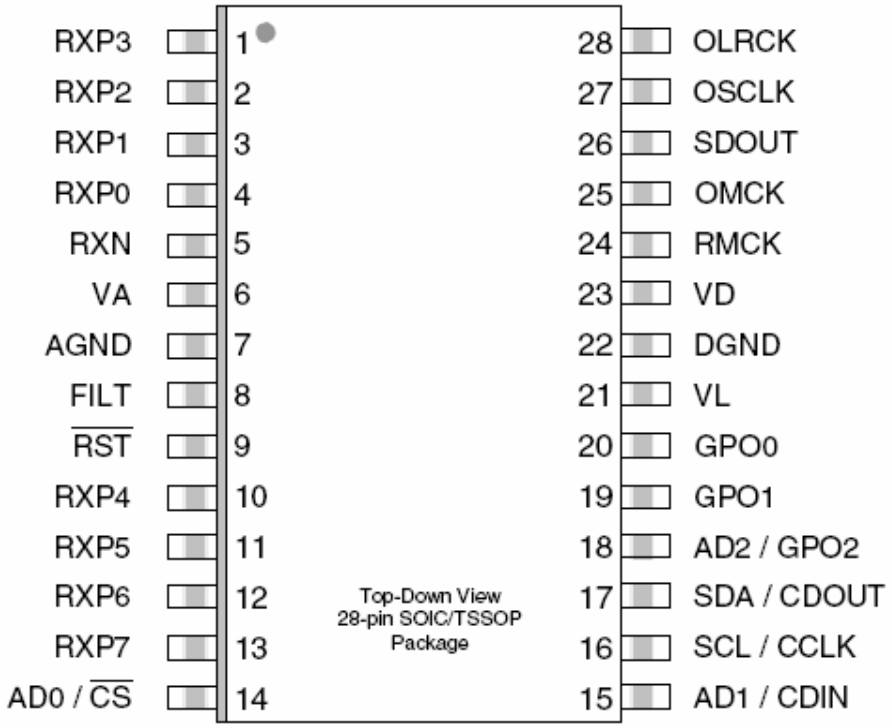

ICS83905AGT TSSOP16

IC, ICS, Crystal Interface-TO-LVCMOS/LVTTL Fanout Buffer

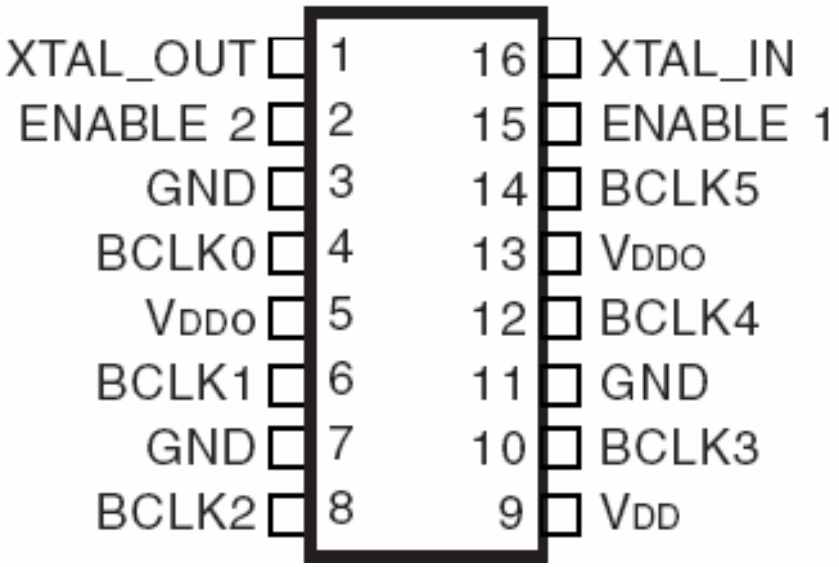

TL072CD SO8

Dual Op-Amp

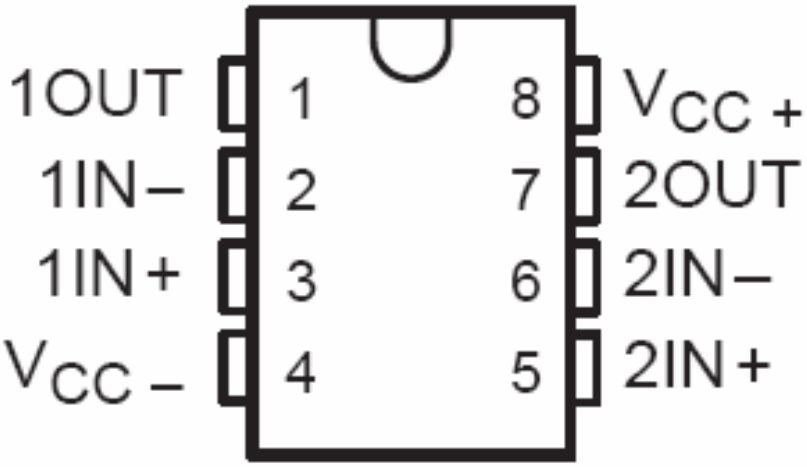

AD8663ARZ SOIC8

IC, ADI, op amp

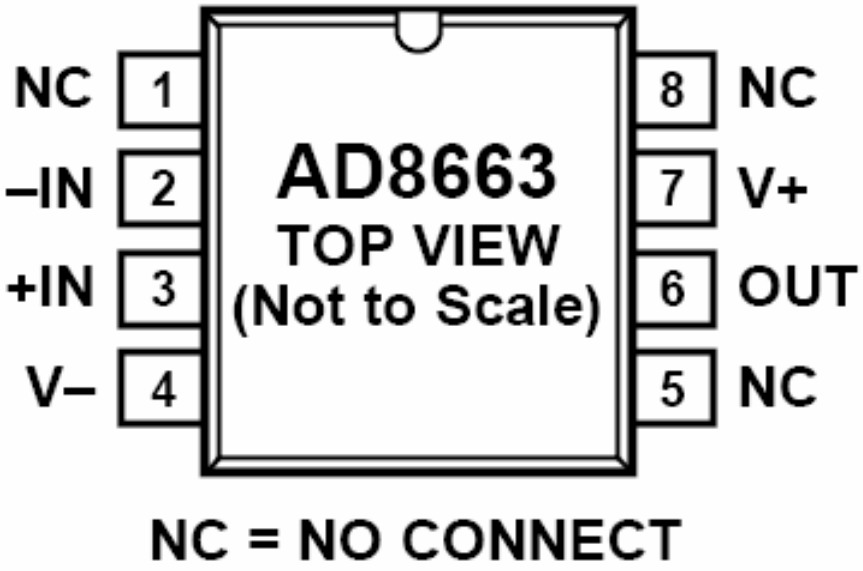

NC = NO CONNECT

OPA2134UA SOIC8

IC, TI, op amp

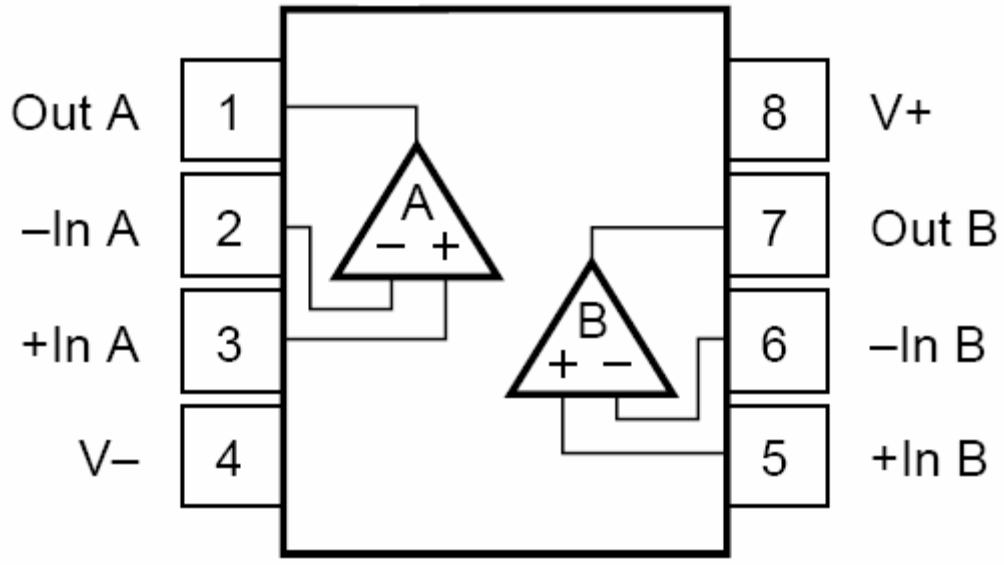

OP275GS SO8

IC, ADI, op amp

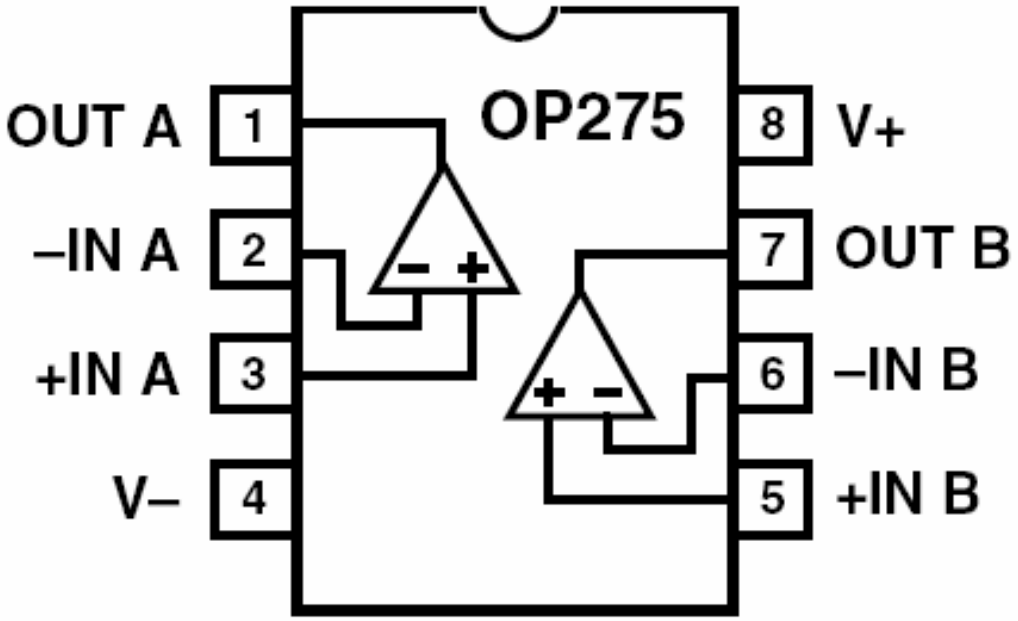

LM393 SOP8

IC, ST, Comparator

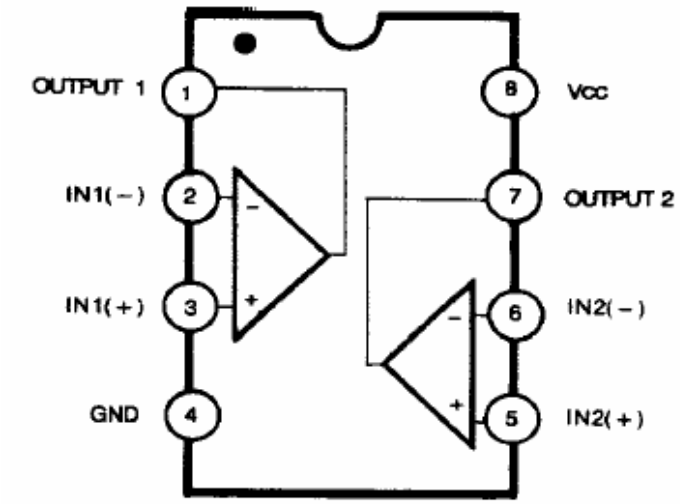

AZ1117-ADJ/3.3V/5V SOT-223

IC, AAC, LDO

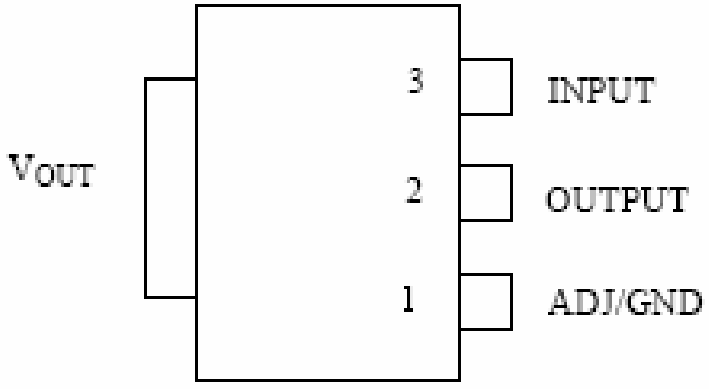

LM9022 SOP8

IC, NS, Vacuum Fluorescent Display Filament Driver

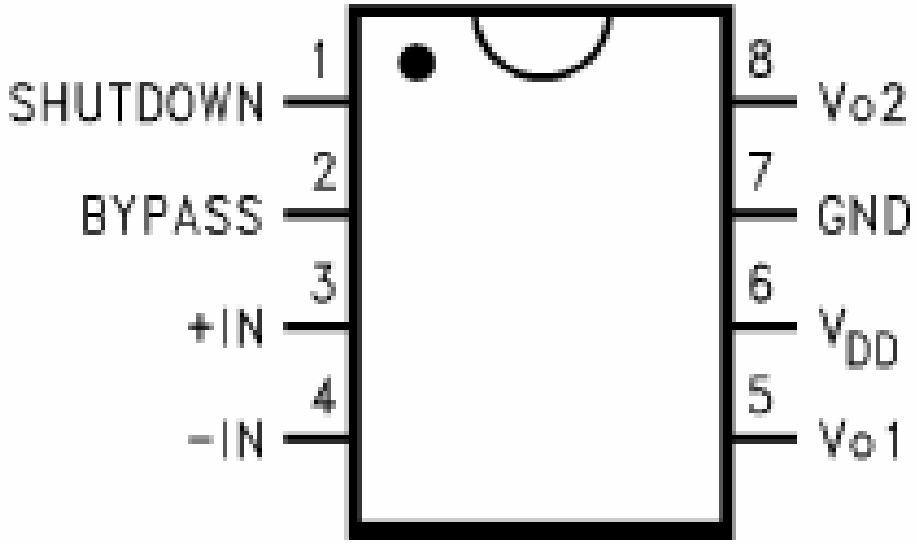

EM78P156ELM-G SOIC18

IC, ELAN, MCU

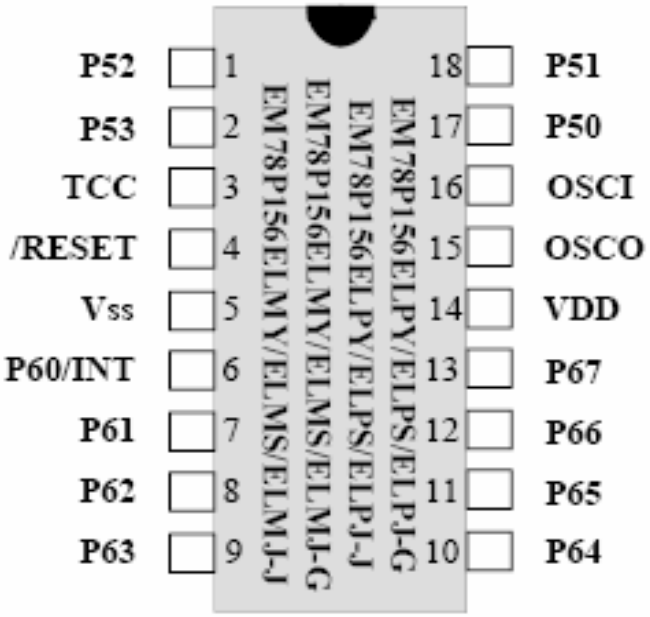

TPS73033DBVR DVB5

IC, TI, LDO

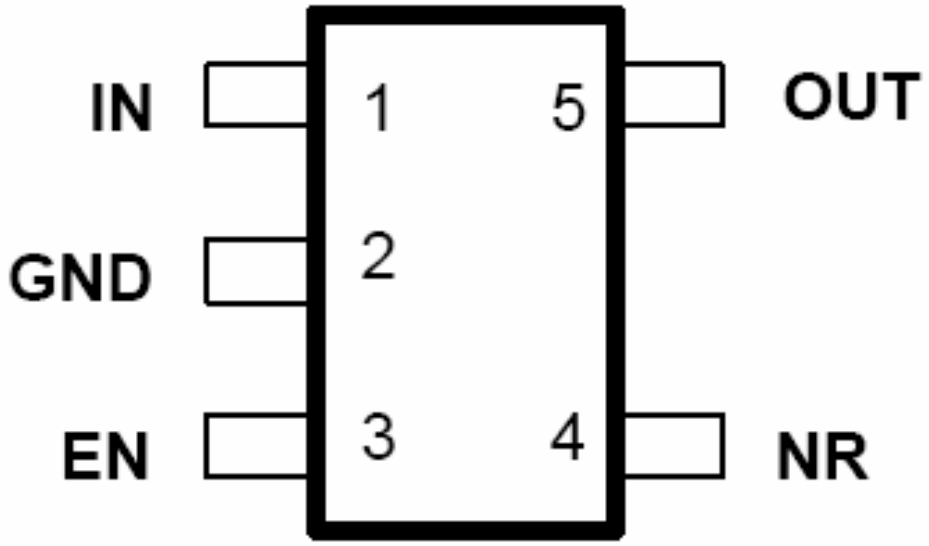

AAT3522 SOT-23

IC, AAT, Reset monitor

L7805/L7812 TO-220

Positive Regulator

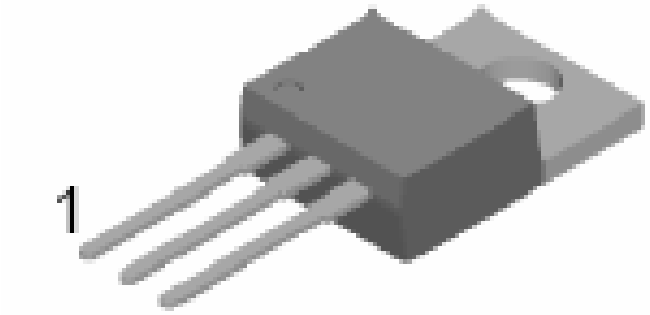

1. Input 2. GND 3. Output

L7912 TO-220

Negative Regulator

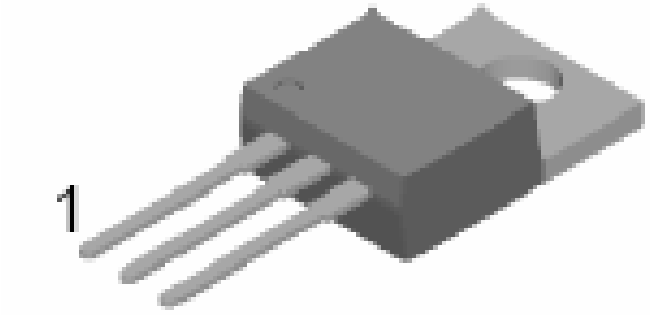

1. GND 2. Input 3. Output

BA33BCO TO-220

IC, ROHM, Dropout Voltage Regulator

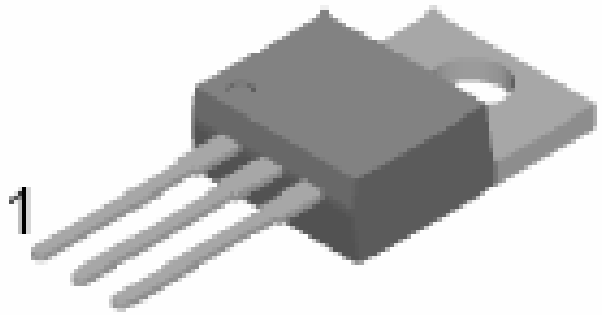

1. Vcc 2. GND 3. Output

LM317T TO-220

IC, ST, Adj. Voltage Regulator

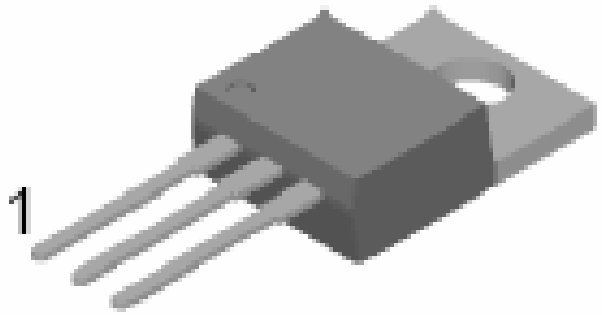

1. Adj 2. Output 3. Input

KA5M02659R DIP8 IC, FAIRCHILD, FPS

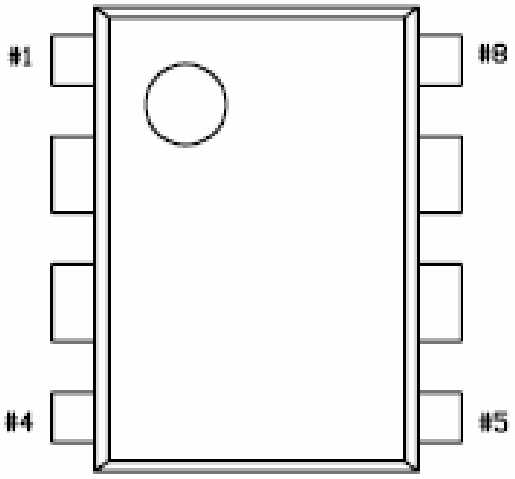

1.6.7.8. Drain
2. GND
3. Vcc
4. FB
5. NC

PC817 DIP4

IC, Sharp, Photoelectric Coupler

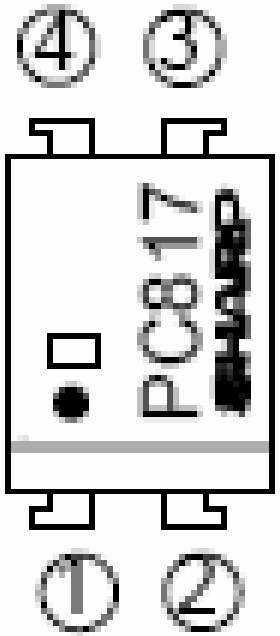

① Anode
② Cathode
③ Emitter
④ Collector

AZ431AZ-ATRE1 TO-92

IC, AAC, Adjustable Shunt Regulator

TO-92

1

1. Ref 2. Anode 3. Cathode

LC75711NE QFP64E

IC, SANYO, VFD Driver

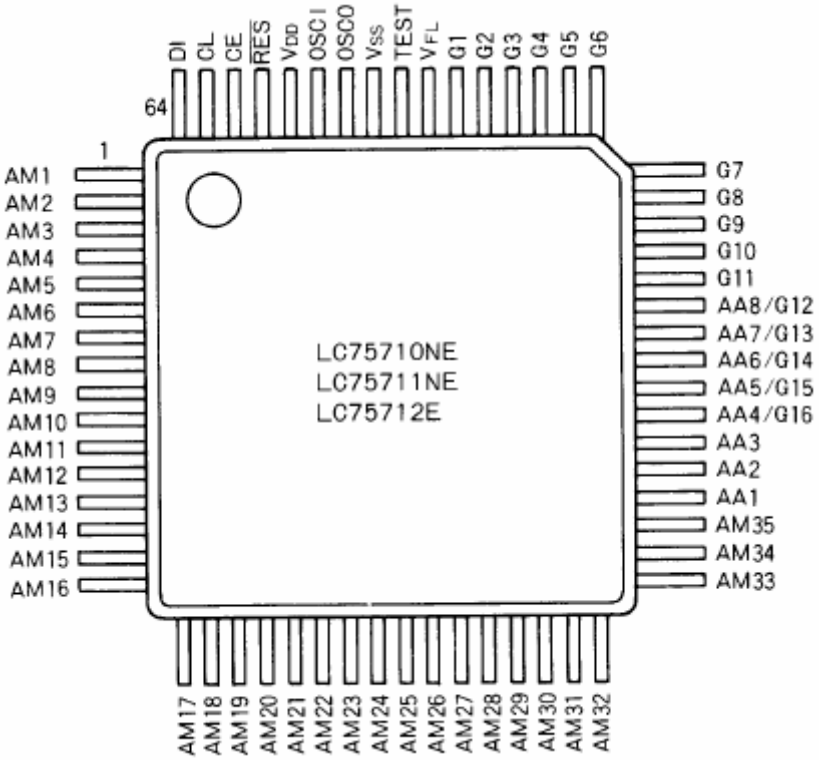

HS0038B

Vishay Telefunken

Photo Modules for PCM Remote Control Systems

Description

The HS0038B – series are miniaturized receivers for infrared remote control systems. PIN diode and preamplifier are assembled on lead frame, the epoxy package is designed as IR filter.
The demodulated output signal can directly be decoded by a microprocessor. HS0038B is the standard IR remote control receiver series, supporting all major transmission codes.

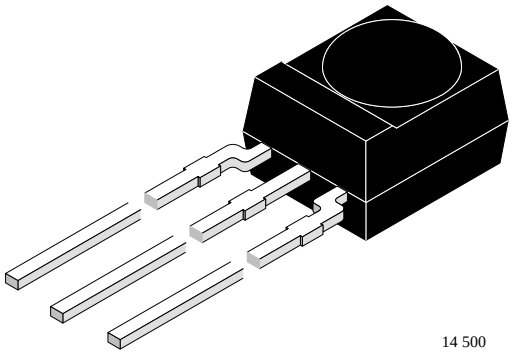

14 500

Features

- Photo detector and preamplifier in one package
- Internal filter for PCM frequency
- TTL and CMOS compatibility
- Output active low
- Improved shielding against electrical field disturbance
- Suitable burst length ≥10 cycles/burst
- Low power consumption
- High immunity against ambient light
- Continuous data transmission possible (800 bit/s)

Block Diagram

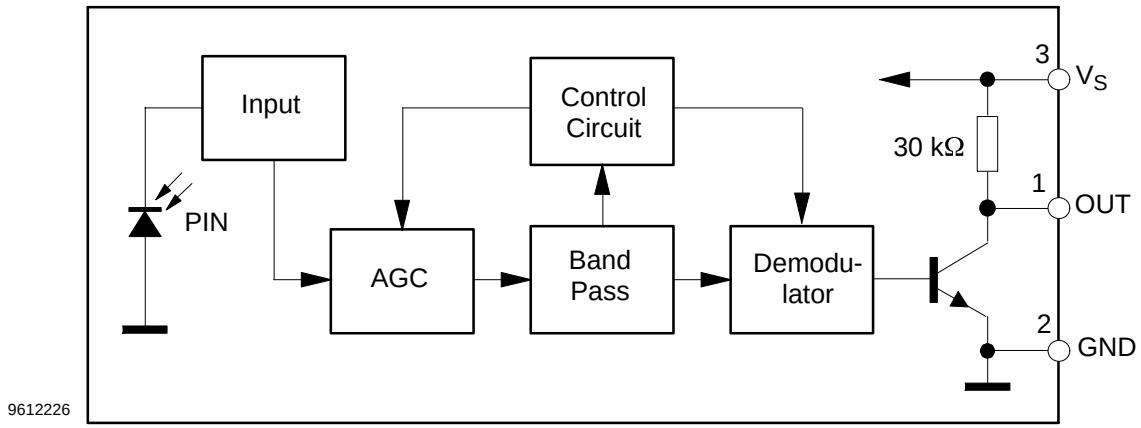

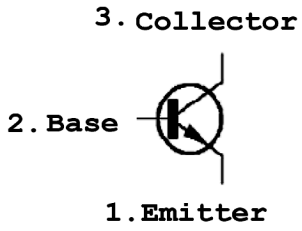

2N5551 TO-92

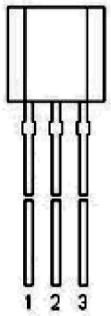

1. Emitter
2. Base
3. Collector

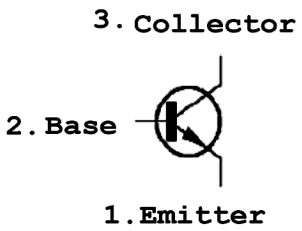

KTC8050 TO-92

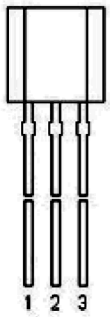

1. Emitter
2. Base
3. Collector

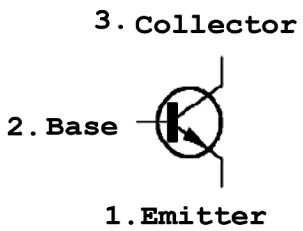

KTC9014 TO-92

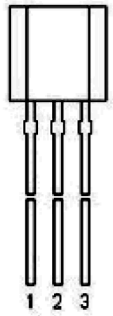

1. Emitter
2. Base
3. Collector

2SK3018T MOSFET N CHANNEL

BSS123 MOSFET N CHANNEL

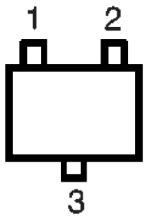

(1) Source
(2) Gate
(3) Drain

2SB1132 PNP MPT3

2SD1164 NPN MPT3

BCP53-16 PNP TO-223

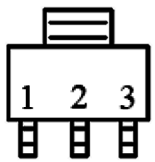

1) Base
2) Collector
3) Emitter

2SA1035 PNP SOT-23

2SA2406 NPN SOT-23

KTC 8050 NPN SOT-23

KTC 8550 PNP SOT-23

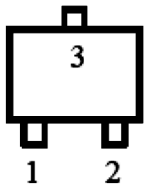

1) Base
2) Emitter
3) Collector

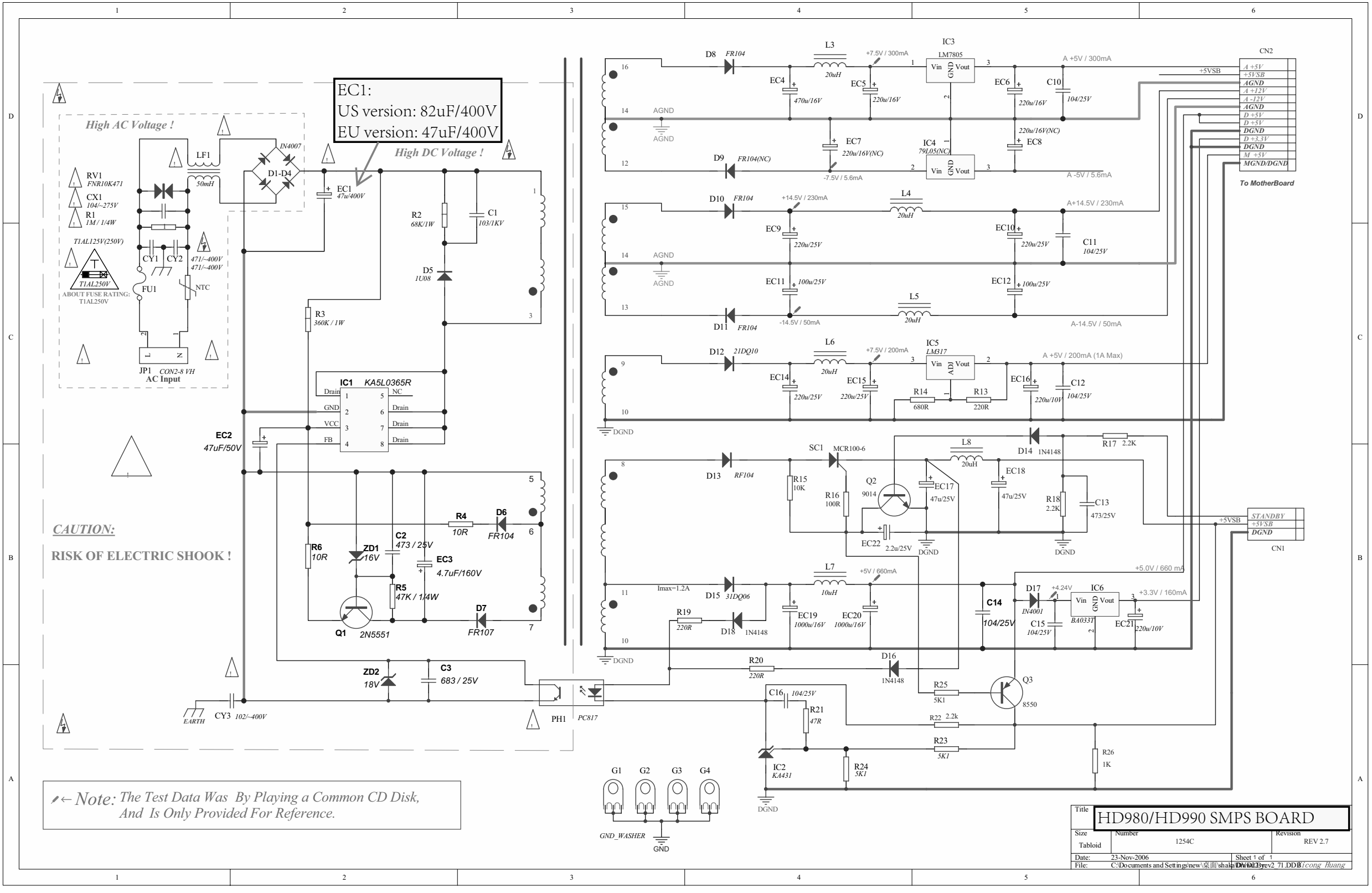
EC1:
US version: 82uF/400V
EU version: 47uF/400V
High AC Voltage !
High DC Voltage !
CAUTION:
RISK OF ELECTRIC SHOOK !
AC Input
JP1 CON2-8 VH
IC1 KA5L0365R
IC3 LM7805
IC4 79L05(NC)
IC5 LM317
IC6 BA033T
IC2 KA431
Q1 2N5551
Q2 9014
Q3 8550
PH1 PC817
CN2
CN1
To MotherBoard
Note: The Test Data Was By Playing a Common CD Disk, And Is Only Provided For Reference.
HD980/HD990 SMPS BOARD
Tabloid
1254C
REV 2.7
23-Nov-2006
Sheet 1 of 1

HD 990 harman/kardon

CN5
CON13_2.0MM_DIP
1 A+5V
2 +5VSTBY
3
4 A+14.5V
5 A-14.5V
6
7 D+5V
8
9
10 D+3.3V
11
12 M+5V
13

■■■ NET "A+5V"--100mA;
■■■ NET "+5VSTBY"--100mA;
■■■ NET "A+14.5V"--100mA;
■■■ NET "A-14.5V"--100mA;
■■■ NET "D+5V"--1A;
■■■ NET "M+5V"--1A;
■■■ NET "D+3.3V"--200~300mA;

VT7208 RAM

D+5V — FB3 100R — D5V
CE33 220uF/10V, C103 100nF
CE57 100uF/10V
■■■ NET "A5V"--1A;
PUH & ALPC BJT

U29 AZ1117H-3.3 (IN, ADJ, TAB OUT)
CE34 100uF/10V
VCC3
CE35 100uF/10V, C104 100nF
VT7208 I/O

FB4 100R — 3.3VA
CE36 100uF/10V, C105 100nF
VT7208 CKT

FB5 100R — A5V
CE37 100uF/10V, C106 100nF
VFD DRIVER

FB6 100R — +5V_VFD
CE40 100uF/10V, C109 100nF
■■■ NET "+5V_VFD"--1A;

U30 AZ1117-ADJ (IN, ADJ, TAB OUT)
CE38 100uF/10V
R208 1K
R210 560R
C108 100nF
VDD 2.0V
CE39 100uF/10V, C107 100nF
VT7208 CORE

■■■ NET "PVCC"--1A;

MASTER CLOCK & DAC

A+5V — FB7 100R — +5V
CE41 220uF/10V, C110 100nF

MOTOR CONTROL

M+5V — FB9 100R — PVCC
CE46 220uF/10V, C114 100nF

+3.3V — R209 NA — TP35
U31 AAT3522 (VCC, GND, RST#)
■■■ NET "+3.3V"--300mA;

DSP & PERIPH.
■■■ NET "+3.3V"--300mA;

D14 30BQ040
D+3.3V — FB8 100R — +3.3V
CE43 220uF/10V, C112 100nF, CE44 100uF/10V
U32 AZ1117-ADJ (IN, ADJ, TAB OUT)
C65 100nF, CE45 100uF/10V
+1.2V
DSP CORE

U22C
ADSP-BF532SBSTZ400
+3.3V — CE42 100uF/10V
VDDRTC: 18
VDDEXT: 6, 12, 20, 31, 45, 57, 71, 93, 107, 118, 134, 145, 156, 171
C111 100nF, C113 100nF, C115 100nF, C116 100nF
+1.2V
VDDINT: 25, 52, 66, 80, 111, 143, 157, 168
C117 100nF, C118 100nF, C119 100nF, C120 100nF
VROUT: 4, 5
GND: 1, 2, 3, 7, 8, 9, 15, 19, 30, 39, 40, 41, 42, 43, 44, 56, 70, 88, 89, 90, 91, 92, 97, 106, 117, 128, 129, 130, 131, 132, 133, 144, 155, 170, 174, 175, 176
TCK: 94
TDO: 87
TDI: 86
TMS: 85
TRST: 84
EMU: 83

■■■ NET "+3.3V"--300mA;
+3.3V — R217 10K, R218 10K, R221 10K, R222 4K7
+3.3V — R223 10K
CN6
CON7X2_2.54MM
1 2
3 4
5 6
7 8
9 10
11 12
13 14

■■■ NET "+3.3V"--300mA;

LOCATION-PAD
for the board
M1 M2 M3

VIA1 VIA_PAD4.0
VIA2 VIA_PAD4.0
VIA3 VIA_PAD4.0
VIA4 VIA_PAD4.0

DGND PGND AGND

OP-AMPS

A+14.5V — L3 47uH
CE47 470uF/35V low-ESR
R211 2K7 1%
R212 3K 1%
R215 100R 1%
C121 100pF
U33 AD8663ARZ
R219 470R
+12VA
CE48 47uF/25V
C123 100nF
U42 AD1580 NA
D17 LED rouge
U44 AD1580 NA
D18 LED rouge
C124 100nF
U34 AD8663ARZ
R220 470R 1%
R213 2K7 1%
R214 1K 1%
R216 100R 1%
C122 100pF
+5VA
CE49 220uF/10V
AD1955

U43 AD1580 NA
D19 LED rouge
C125 100nF
U35 AD8663ARZ
R224 470R
R225 100R 1%
C126 100pF
R227 3K 1%
CE50 47uF/25V
-12VA
CE51 470uF/35V low-ESR
R226 2K7 1%
A-14.5V — L4 47uH
Q40 BCP56-16
Q41 BCP56-16
Q42 BCP53-16
D15 30BQ040
D16 30BQ040
D20 30BQ040

D5V
C211 100nF, C212 100nF, C213 100nF, C214 100nF, C215 100nF, C216 100nF
+1.2V
C66 100nF, C67 100nF, C71 100nF

Harman Kardon	*drawn by*	ABC PCB Sàrl Ch. du Saux 17 CH-1131 Tolochenaz	
Title: HD990 main board			
Size: Custom	Document Number: 013_05_100 MAIN		Rev: 1.8
Date: Friday, June 25, 2010	Sheet 1 of 10		

C188 100nF +3.3V
U41 74LVC244
RX_BITCLK
RX_LRCLK
RX_SDATA
TP16 TP17 TP18
47pF C187
R272 R273 R274 0R 0R 0R
■■■ NET "+3.3V"--300mA;
U22B ADSP-BF532SBSTZ400
TP19 TP20 TP21 TP22 TP23
DAC_BITCLK DAC_LRCLK DAC_SDATA_L DAC_SDATA_R SPDIF_OUT
R125 R126 R127 R128 47R
U12D 74LCX125MTR
SPDIF_48 DAC_BITCLK
R130 47R
R131 47R
1K 1K 1K
R138 R139 R140
SCK MOSI MISO
R136 R137 47R
RSCLK0 RFS0 DR0PRI DR0SEC TSCLK0 TFS0 DT0PRI DT0SEC
RSCLK1 RFS1 DR1PRI DR1SEC TSCLK1 TFS1 DT1PRI DT1SEC
SCK MOSI MISO
RX TX
PF0/SPISS PF1/SPISEL1/TMRCLK PF2/SPISEL2 PF3/SPISEL3/PPI_FS3 PF4/SPISEL4/PPI15 PF5/SPISEL5/PPI14 PF6/SPISEL6/PPI13 PF7/SPISEL7/PPI12 PF8/PPI11 PF9/PPI10 PF10/PPI9 PF11/PPI8 PF12/PPI7 PF13/PPI6 PF14/PPI5 PF15/PPI4
PPI0 PPI1 PPI2 PPI3 PPI_CLK
TMR0 TMR1/PPI_FS1 TMR2/PPI_FS2
EXT_MCLK IR_IN
R120 R122 R123 10K
SPDIF_48
EN_HRS# EN_352K# MUTE_1955 RST_1955# CS_1955_1# CS_1955_2# CS_75711 CS_8416# RST_8416# RX_VALID#
R132 R133 R134 R135 10K
+5V
D2 LL4148
K1C RELAY JRC-19F
K2C RELAY JRC-19F
MQ1 BSS123
C72 100nF +3.3V ■■■ NET "+3.3V"--300mA;
CE20 100uF/10V
U23 KH29LV040CQC-70G
A1 A2 A3 A4 A5 A6 A7 A8 A9 A10 A11 A12 A13 A14 A15 A16 A17 A18 A19
I/O0 I/O1 I/O2 I/O3 I/O4 I/O5 I/O6 I/O7
D0 D1 D2 D3 D4 D5 D6 D7
OE_FLASH# WE# CS_FLASH#
DRST# R141 33R ATA_RST#
A[1..19]
D[0..15]
DD[0..15]
ATAPI BUS
RN2 4*33R DD7 DD8 DD6 DD9 D7 D8 D6 D9
RN3 4*33R DD5 DD10 DD4 DD11 D5 D10 D4 D11
RN4 4*33R DD3 DD12 DD2 DD13 D3 D12 D2 D13
RN5 4*33R DD1 DD14 DD0 DD15 D1 D14 D0 D15
RN6 4*33R DIOWR# DIORD# IORDY DA1
RN7 4*33R DA0 DA2 CS1FX# CS3FX#
U22A ADSP-BF532SBSTZ400
D0 D1 D2 D3 D4 D5 D6 D7 D8 D9 D10 D11 D12 D13 D14 D15
ABE0/SDQM0 ABE1/SDQM1
SDQM0 SDQM1
CS_FLASH#
AMS0 AMS1 AMS2 AMS3
ATA_CS1# ATA_CS0#
AOE RE# WE# ARE AWE ARDY
OE_FLASH# RE# WE# ATA_RDY
BR BG BGH
NMI BMODE0 BMODE1
RESET RST#
A1 A2 A3 A4 A5 A6 A7 A8 A9 A10 A11 A12 A13 A14 A15 A16 A17 A18 A19
CLKOUT SCKE
SMS SRAS SCAS SWE SA10
CLKIN XTALO MCLK_DSP
RTXI RTXO
R148 22R
U24 HY57V641620ETP-7
A0 A1 A2 A3 A4 A5 A6 A7 A8 A9 A10/AP A11 BA0/A13 BA1/A12 CLK CKE CS RAS CAS WE DQML DQMH NC1 NC2 VSS VSS VSS
DQ0 DQ1 DQ2 DQ3 DQ4 DQ5 DQ6 DQ7 DQ8 DQ9 DQ10 DQ11 DQ12 DQ13 DQ14 DQ15
VCC VCC VCC VCCQ VCCQ VCCQ VCCQ VSSQ VSSQ VSSQ VSSQ VSSQ
C73 C74 100nF
■■■ NET "+3.3V"--300mA;
■■■ NET "+3.3V"--300mA;
■■■ NET "+3.3V"--300mA;
4K7 10K 10K 10K 10K 10K
R142 R143 R144 R145 R146 R147
A2 A1 A3
C75 C76 C77 C78 C79 10pF 10pF 10pF NA 10pF
C190 C191 C192 C193 C194 C195 C196 C197 C198 C199 C200 C204 C208 100nF

Harman Kardon *drawn by* ABC PCB S.r.l. Ch. du Saux 17 CH-1131 Tolochenaz

Title: HD990 main board
Size: Custom | Document Number: 013_05_100 MAIN | Rev: 1.8
Date: Friday, June 25, 2010 | Sheet 1 of 10

HD 990 harman/kardon

I/V conversion

+12VA C2 100nF +12VA
R5 820R 1%
U1A OP275GS
C6 100nF
510R 1% R12
-12VA
C183 3.3nF

+5V +5VA
FB11 100R
FB12 100R
CE59 100uF/10V C9 100nF
CE60 100uF/10V C10 100nF

U3 AD1955
RST_1955# 23 RST
DAC_LRCLK 2 LRCLK/EF_WCLK
DAC_BITCLK 3 BCLK/EF_BCLK
DAC_SDATA_L 4 SDATA/EF_LDATA
DAC_SDATA_R 5 EF_RDATA
DAC_MCLK_2 27 MCK
+5V 6 DSD_SCLK
7 DSD_LDATA
8 DSD_RDATA
9 DSD_PHASE
CS_1955_2# 25 CLATCH
SCK 26 CCLK
MOSI 24 CDATA
DVDD 28 AVDD 15 DGND 10 AGND 19 AGND
MUTE 22 → MUTE_1955
OUT L+ 18
OUT L- ZERO_L 21
OUT R+ 11
OUT R- ZERO_R 20
FILTR 13
IREF 14
FILTB 16
CE3 47uF/25V
C14 100nF
R21 2K7 1%
C15 100nF
CE4 47uF/25V

+12VA R26 820R 1%
+12VA U1B OP275GS
510R 1% R33
-12VA
C184 3.3nF

R8 2K7 1%
R11 2K7 1%
R6 2K2 1%
R15 2K2 1%
C174 680pF
C168 680pF
U2A OP2134UA

Servo DC
+12VA C11 100nF
U4A TL072
R17 47K 1%
C173 100nF
C13 100nF
R20 47K 1%
-12VA

Differential output stage
+12VA
R1 330R 1%
R2 330R 1%
Q1 2SA1035
Q2 2SA1035
CE1 47uF/25V
C1 100nF
Q3 2SC2406
R3 15K 1%
R4 680R 1%
Q4 2SA1035
R7 330R 1%
R9 100R 1%
Q5 2SC2406
R13 330R 1%
C8 100nF
CE2 47uF/25V
R16 680R 1%
Q6 2SA1035
Q7 2SC2406
Q8 2SC2406
R18 330R 1%
R19 330R 1%
-12VA

R10 56R 1%
C172 2.2nF
R14 47K 1%
UNBAL_L
JP1 AV2-8.4-1G
JP2 XLR male
K1A RELAY JRC-19F

Servo DC
+12VA
R38 47K 1%
U4B TL072
C167 100nF
R41 47K 1%
-12VA

R29 2K7 1%
R32 2K7 1%
R27 2K2 1%
R36 2K2 1%
C171 680pF
C169 680pF
U2B OP2134UA

Differential output stage
+12VA
R22 330R 1%
R23 330R 1%
Q9 2SA1035
Q10 2SA1035
CE5 47uF/25V
C16 100nF
Q11 2SC2406
R24 15K 1%
R25 680R 1%
Q12 2SA1035
R28 330R 1%
R30 100R 1%
Q13 2SC2406
R34 330R 1%
C21 100nF
CE6 47uF/25V
R37 680R 1%
Q14 2SA1035
Q15 2SC2406
Q16 2SC2406
R39 330R 1%
R40 330R 1%
-12VA

R31 56R 1%
C170 2.2nF
R35 47K 1%
K1B RELAY JRC-19F

Harman/Kardon	drawn by	ANAGRAM Technologies SA ZI Le Tr[illegible]i 6A CH-1028 Pr[illegible]erenges
Title: HD 990 Main board		
Size: Custom	Document Number: 5604C	Rev: 1.8
Date: Friday, June 25, 2010	Sheet 2 of 10	

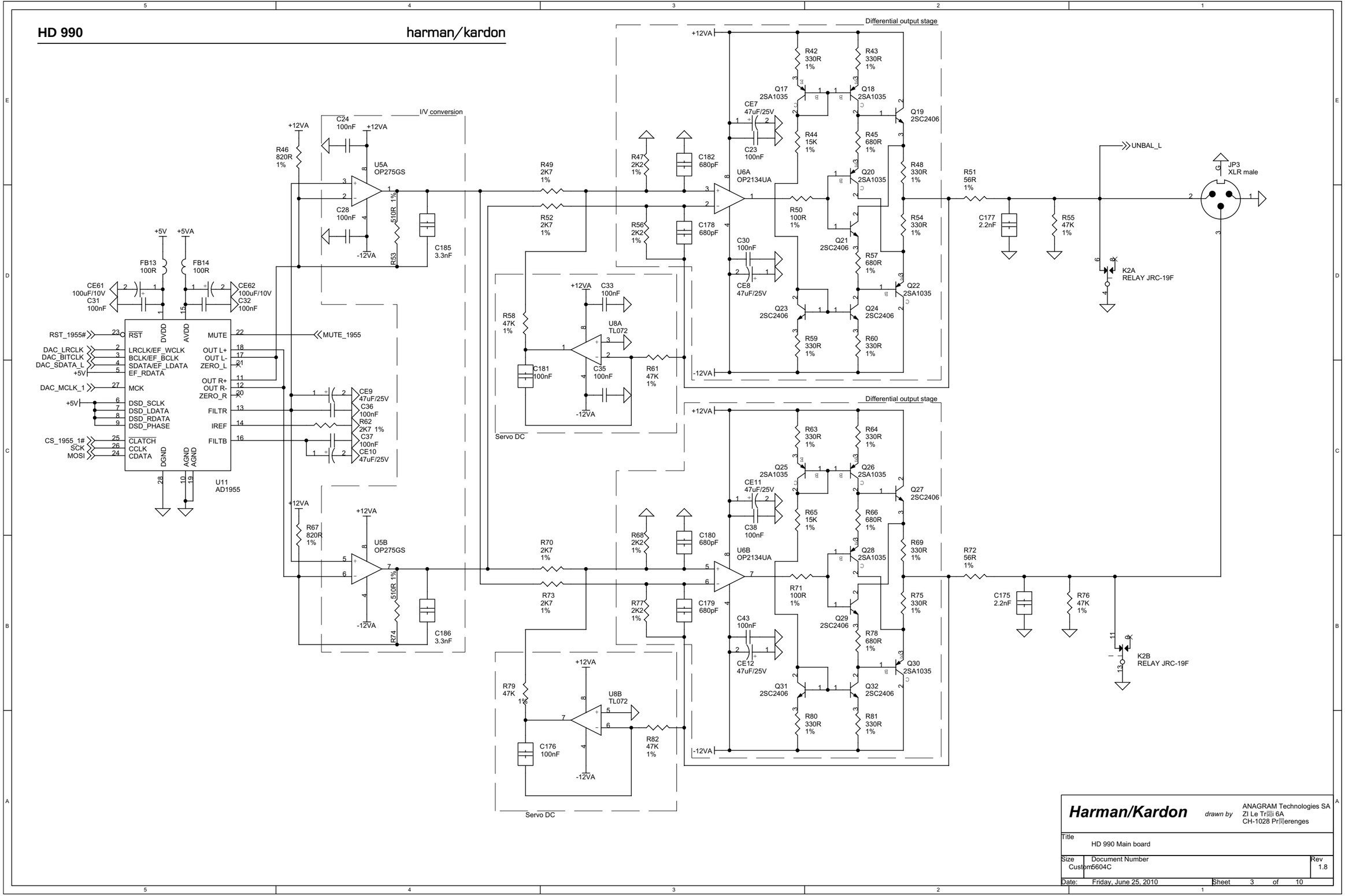
HD 990
harman/kardon
Differential output stage
I/V conversion
Servo DC
U11
AD1955
U5A
OP275GS
U5B
OP275GS
U6A
OP2134UA
U6B
OP2134UA
U8A
TL072
U8B
TL072
JP3
XLR male
UNBAL_L
K2A
RELAY JRC-19F
K2B
RELAY JRC-19F
MUTE_1955
RST_1955#
DAC_LRCLK
DAC_BITCLK
DAC_SDATA_L
DAC_MCLK_1
CS_1955_1#
SCK
MOSI
Harman/Kardon
drawn by
ANAGRAM Technologies SA
ZI Le Tr[illegible]i 6A
CH-1028 Pr[illegible]erenges
Title
HD 990 Main board
Size
Custom
Document Number
5604C
Rev
1.8
Date:
Friday, June 25, 2010
Sheet
3
of
10

HD 990 harman/kardon

■■■ NET "+3.3V"--300mA;

JP4 H-GQ+RCA1(R) · C217 NA · T1 WB1010-1 · C47 100nF · R85 75R · C51 100nF · R84 2K7 · L1 22uH · CE63 47uF/25V · C55 100nF · CE15 47uF/25V · R96 100R · C189 100nF · R276 10K

FB1 100R · C48 100nF · CE13 47uF/25V · C45 100nF · C49 100nF · U10 CS8416-CZZ

RST_8416# · RXP0 · RXP1 · RXP2 · RXP3 · RXSEL1 · RXSEL0 · TXSEL1 · TXSEL0 · RXN · NV/RERR · SCK · 96KHZ · AUDIO · MISO · RCBL · AGND · DGND · VA · VD · VL · RST

OLRCK · OSCLK · SDOUT · RMCK · OMCK · TX · C · U · FILT

R86 10K · R87 10K · R90 47R · R91 47R · R92 47R · C54 100nF · CS_8416# · R93 3K3 · C56 1nF · C57 22nF

RX_LRCLK · RX_BITCLK · RX_SDATA · RX_VALID#

SPDIF_OUT · U39A 74HCT14D · U39B 74HCT14D · U39C 74HCT14D · C50 100nF · R83 240R · R88 100R · T2 WB1010-1 · C218 NA · JP5 H-GQ+RCA1(T) · C52 100nF · R89 10K · R94 100R · FB2 100R · CE14 47uF/25V · C53 100nF · U39F 74HCT14D · C46 100nF

U40 74LCX74 · C165 100nF

DAC_BITCLK · R268 47R · U12C 74LCX125MTR · EN_HRS# · R275 47R

DAC_MCLK_1 · R95 47R · U12A 74LCX125MTR · EN_HRS# · EXT_MCLK · R97 47R · U15 DS90LV012A · R99 100R · C60 100nF

DAC_MCLK_2 · R102 47R · U12B 74LCX125MTR · EN_352K#

R266 8K2 · R269 NA · T3 WB1010-1 · R270 NA · R267 4K7 · R263 2K7 · R261 NA · R262 NA · JP6 HRS-Link · GND

■■■ NET "+3.3V"--300mA;

DAC_SDATA_R · R110 47R · R115 1K · U39D 74HCT14D · U39E 74HCT14D · R260 560R · R259 560R · R265 150R · C164 100nF · R271 NA · R103 NA · T4 WB1010-1 · T5 WB1010-1 · R264 2K7 · R104 NA · R105 NA

C58 100nF · C59 100nF · U14 ICS83905 · C61 4.7pF · C62 10pF · Y1 22.5792MHz · C63 10pF · C64 NA · XTAL_IN · XTAL_OUT · ENABLE_1 · ENABLE_2 · VDD · VDDO · VDDO · BCLK0 · BCLK1 · BCLK2 · BCLK3 · BCLK4 · BCLK5 · GND · GND · GND

R98 · R100 · R101 · 100R,Bead,chip · MCLK_DSP

+5V · U17 TPS73033DBVR · IN · EN · GND · OUT · NR · L2 22uH · C68 100nF · C70 10nF · C69 1uF · CE16 47uF/25V · CE17 47uF/25V

U20 PC817 · R109 270R · REMOTE_IR · JP7 SCJ35PP00XS0B00 · IN · OUT · PHONEJACK DUAL · R116 4M7 · R117 390R · R112 4K7 · R113 NA · R114 10K · R118 4K7 · Q33 2SA1035 · D1 LL4148 · CE18 47uF/25V · +5VSTBY

Harman Kardon drawn by ABC PCB S啊l Ch. du Saux 17 CH-1131 Tolochenaz

Title	HD990 main board	
Size: Custom	Document Number 5604C	Rev 1.8
Date: Friday, June 25, 2010	Sheet 4 of 10	

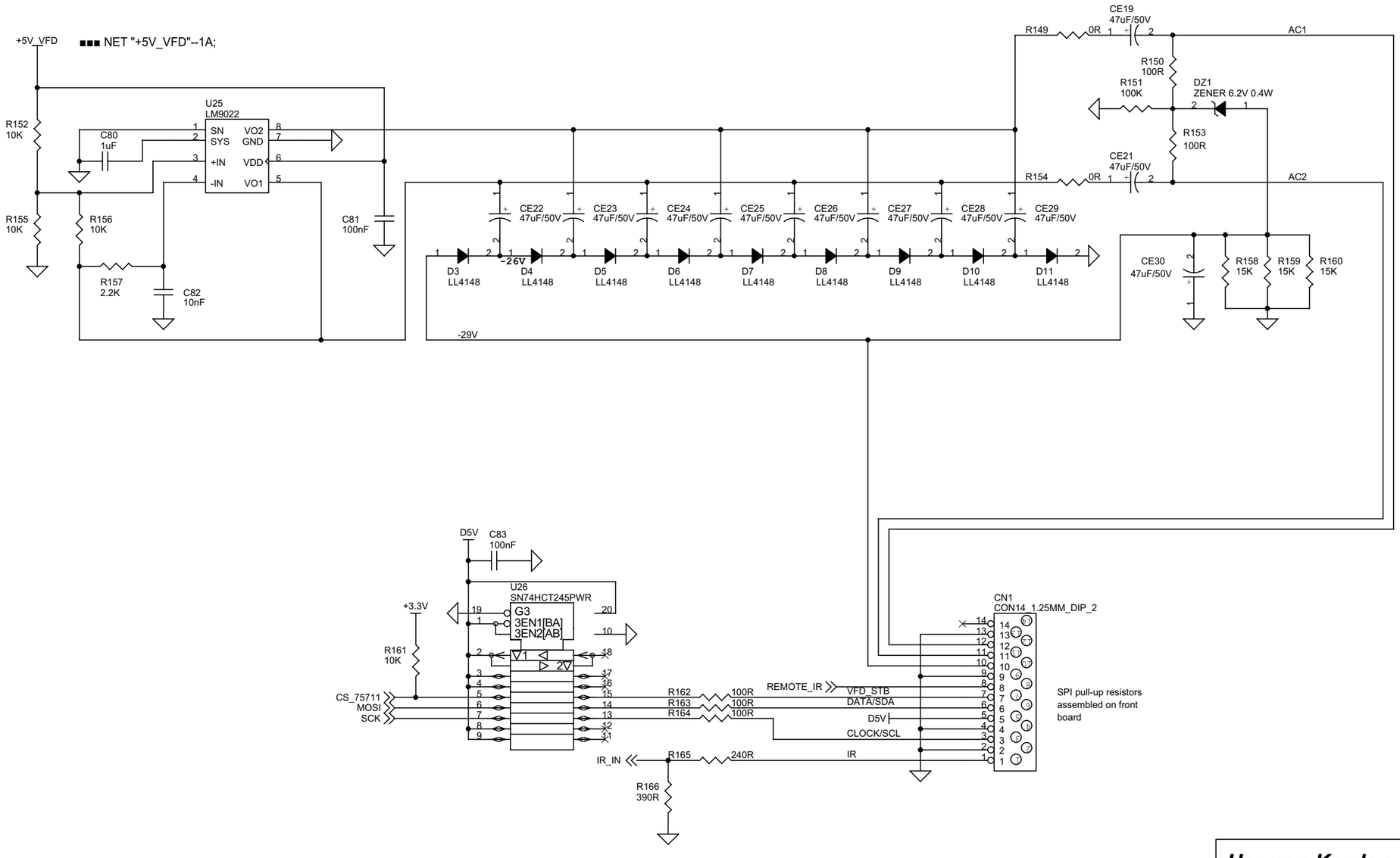

Harman Kardon	*drawn by*	ABC PCB S.A. Ch. du Saux 17 CH-1131 Tolochenaz
Title: HD990 main board		
Size: A3	Document Number: 5604C	Rev: 1.8
Date: Friday, June 25, 2010	Sheet 5 of 9	

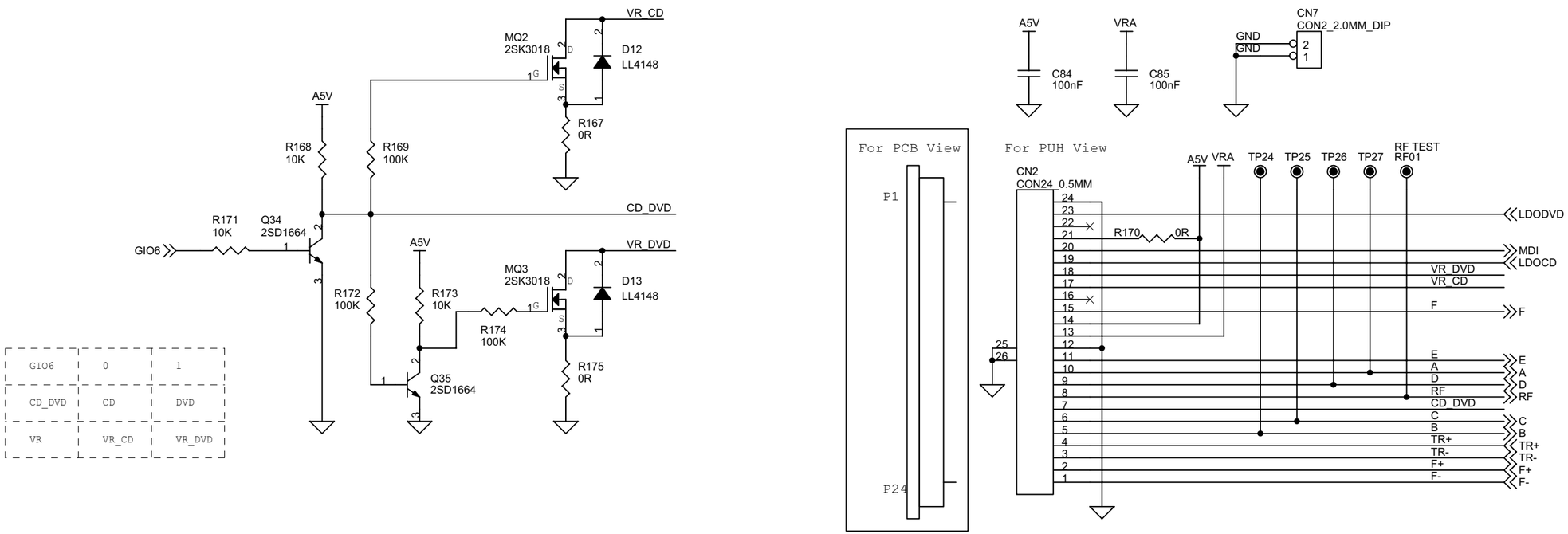

This connector support SF-HD850G

Harman Kardon	*drawn by*	ABC PCB S鄢I Ch. du Saux 17 CH-1131 Tolochenaz
Title	HD990 main board	
Size B	Document Number 5604C	Rev 1.8
Date: Friday, June 25, 2010	Sheet 6 of 9	

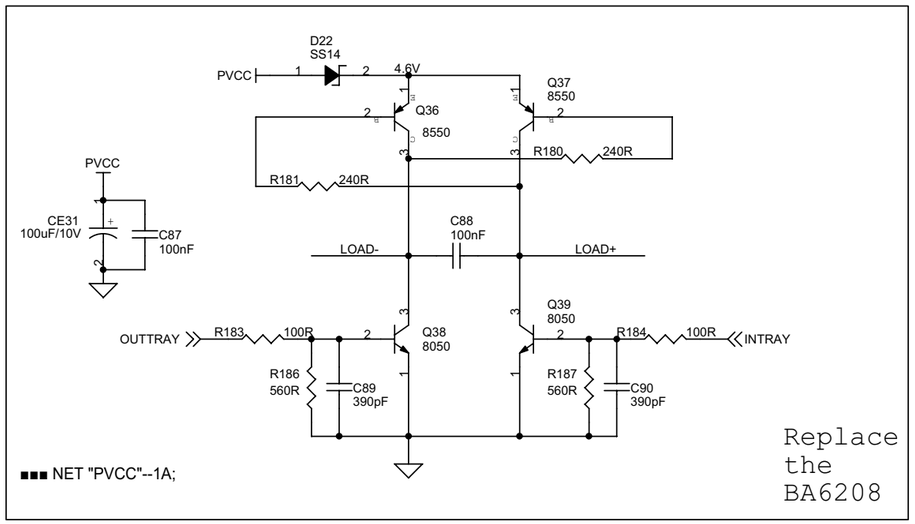

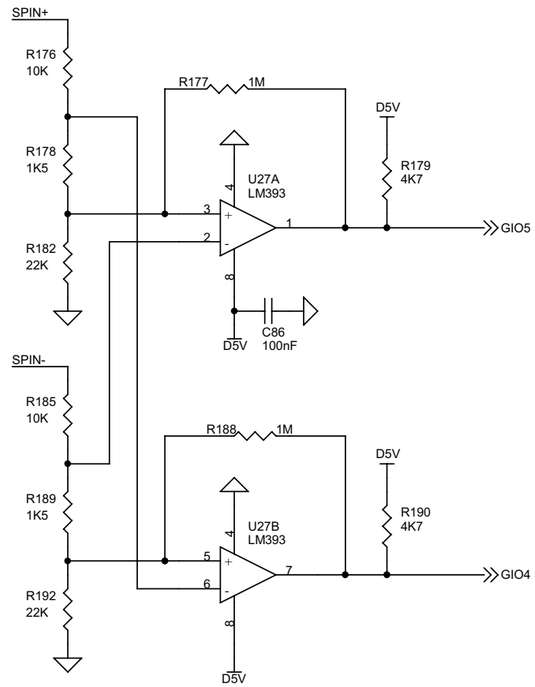

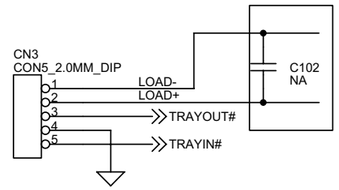

This connector support SF-HD850

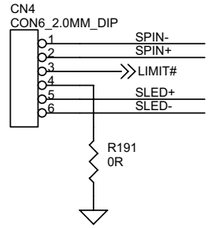

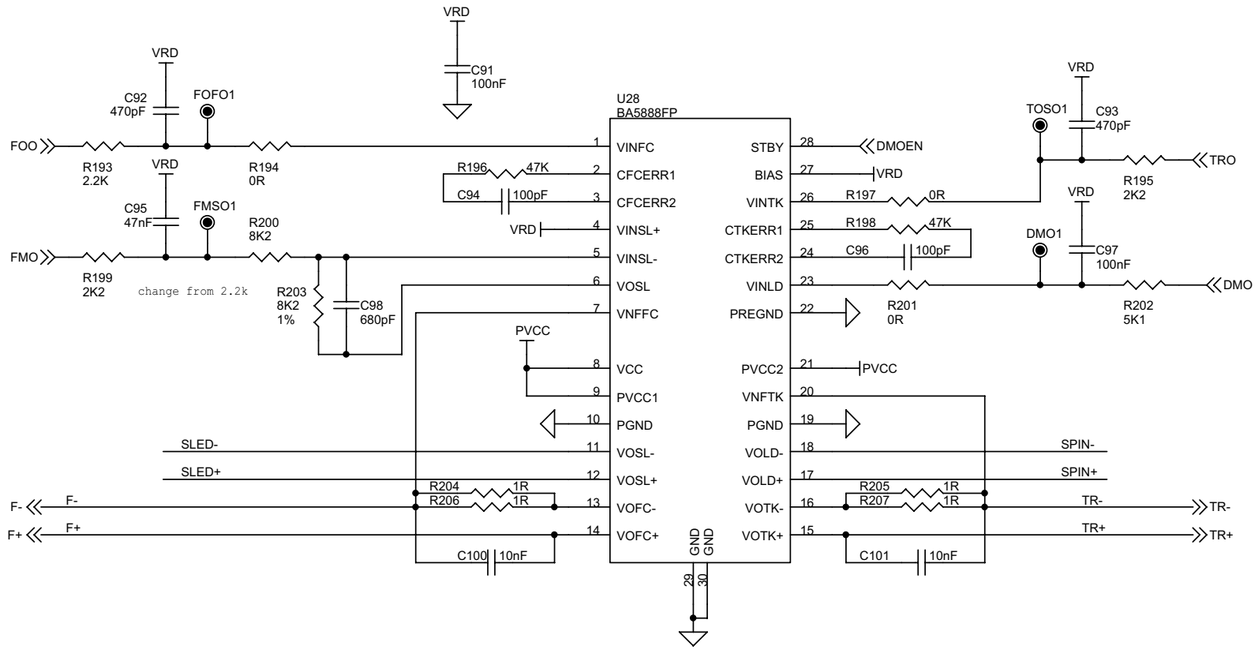

■■■ NET "PVCC"--1A;

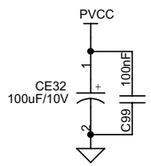

Harman Kardon	*drawn by*	ABC PCB S.r.l. Ch. du Saux 17 CH-1131 Tolochenaz
Title: HD990 main board		
Size: A3	Document Number: 5604C	Rev: 1.8
Date: Friday, June 25, 2010	Sheet 7 of 9	

VT7208

216-PIN LQFP

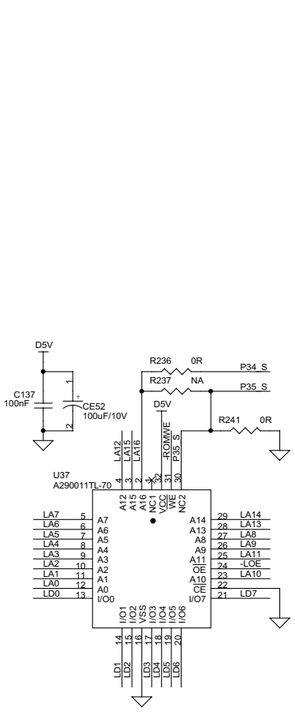

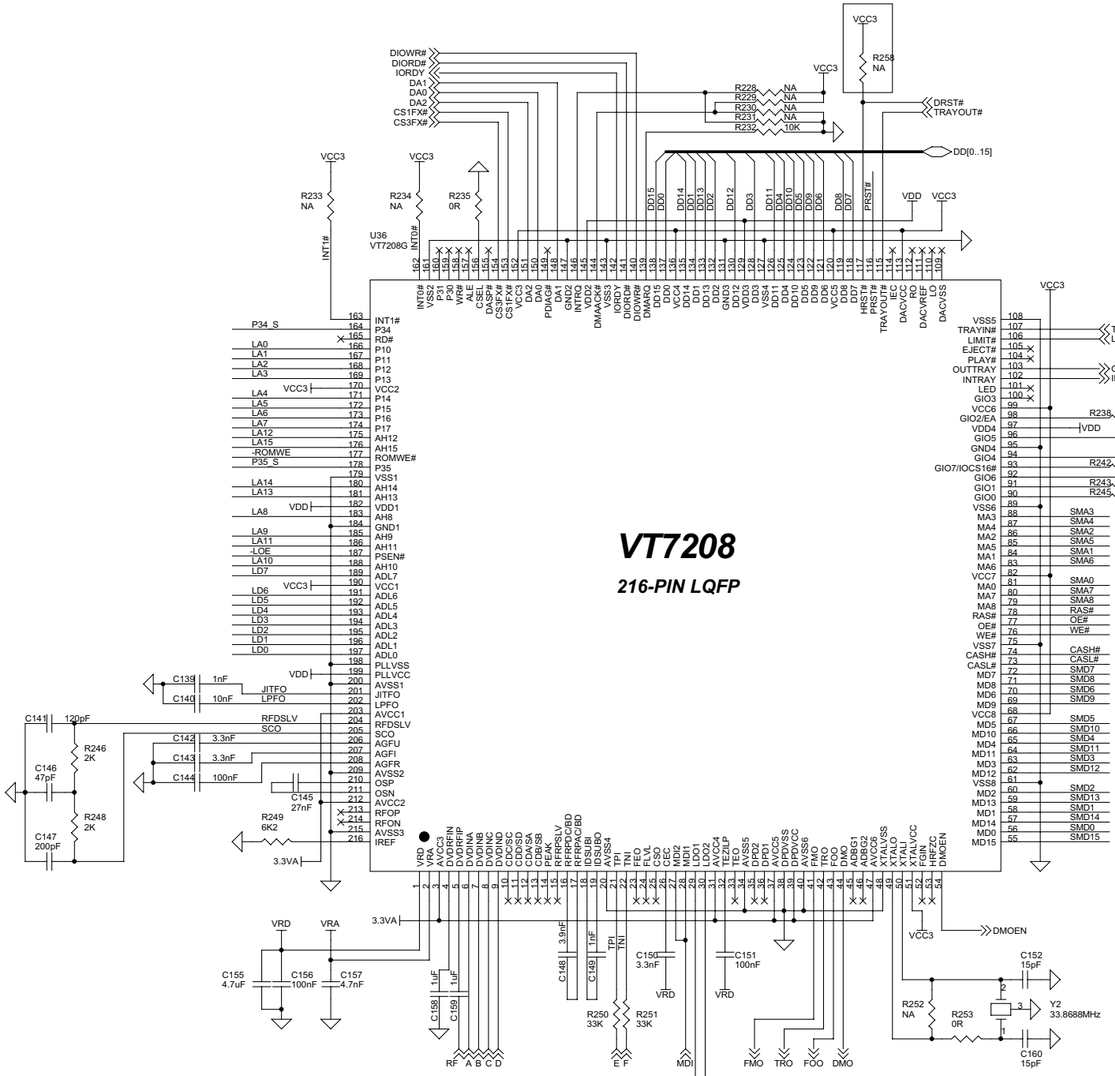

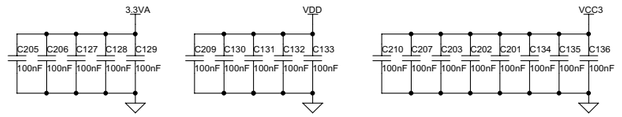

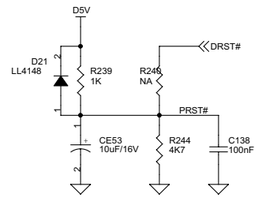

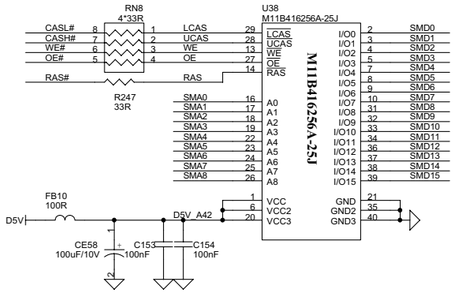

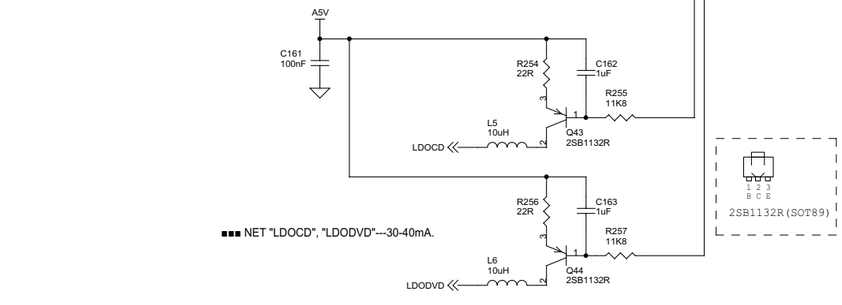

Harman Kardon	drawn by	ABC PCB Sil'I Ch. du Saux 17 CH-1131 Tolochenaz	
Title	HD990 main board		
Size A2	Document Number 5604C		Rev 1.8
Date: Friday, June 25, 2010	Sheet 9 of 9		

Function describe:
1. IR signal receive and transmit.
2. Detect functional button and transmit.
3. control power indicator.
4. control SMPS board go to standby.
5. control mute signal when power on and power off.

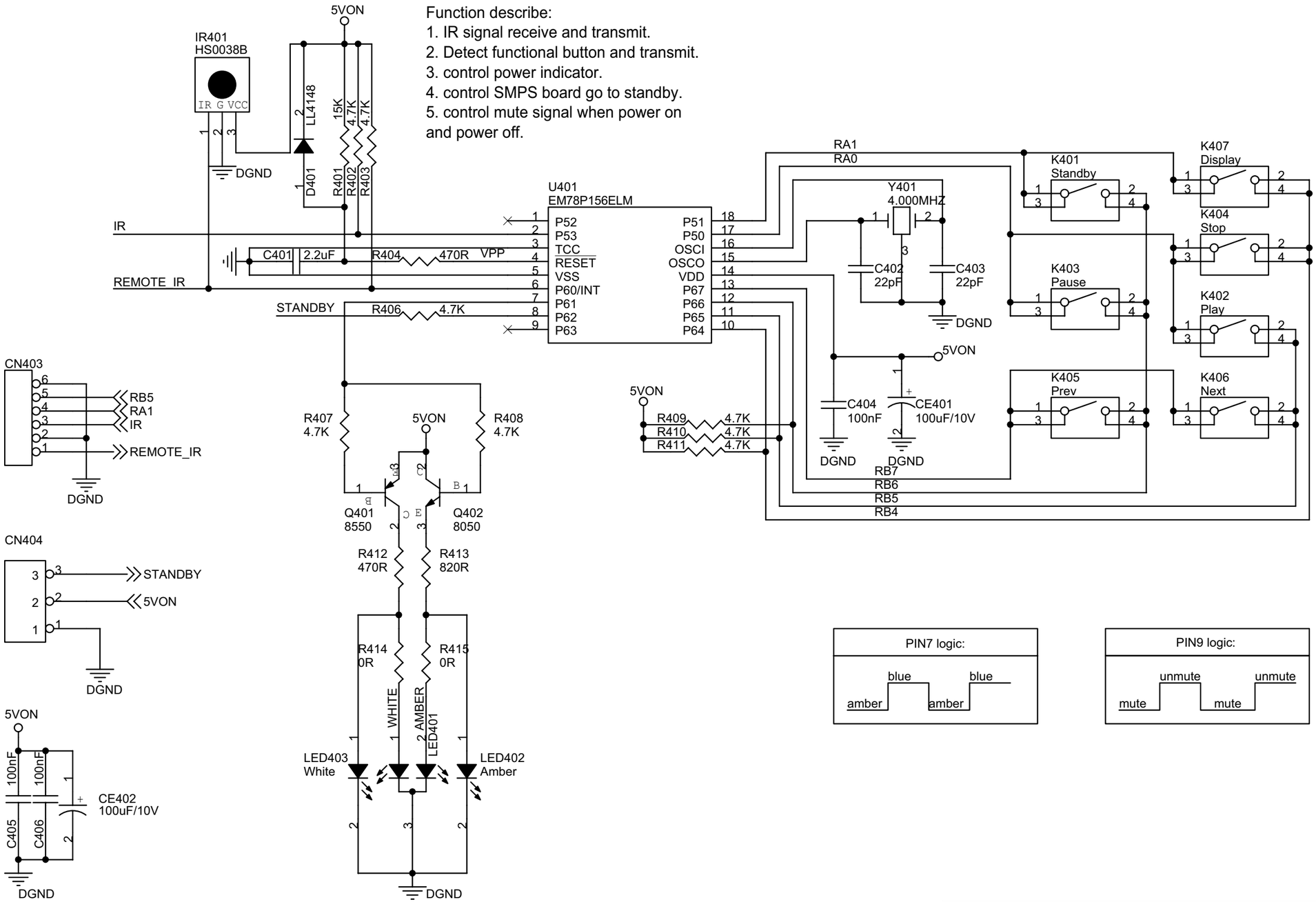

PIN7 logic:

PIN9 logic:

Title	HD980 FRONT PANEL: Button board	
Size A4	Document Number 5575C	Rev 1.6
Date: Saturday, December 06, 2008	Sheet 1 of 2	

CN401
CON14_1.25MM_DIP_2

AC1
AC2
-29V
REMOTE_IR
VFD_STB
DATA/SDA
D5V
CLOCK/SCL
IR
DGND

D5V
100nF
100nF
C408
C409
CE403
47uF/10V
DGND

VFD401
VFD22-1302FA

VFD 12COLUMNS × 1LINE 5×7 DOT MATRIX

1G 5×7 | 2G 5×7 | 3G 5×7 | 4G 5×7 | 5G 5×7 | 6G 5×7 | 7G 5×7 | 8G 5×7 | 9G 5×7 | 10G 5×7 | 11G 5×7 | 12G 5×7

C407
47nF
AC2
DGND

C415
47nF
AC1
DGND

G[1..13]
AM[1..38]

U402
LC75711NE

G6	49	G6	
G5	50	G5	
G4	51	G4	
G3	52	G3	
G2	53	G2	
G1	54	G1	
-29V	55	VFL	
DGND	56	TEST	
	57	VSS	
R415 10K	58	SOCO	
C411 30pF	59	OSCI	
	60	VDD	
	61	RES	
VFD_STB	62	FCS	
CLOCK/SCL	63	CLK	
DATA/SDA	64	DATAI	

AM32	32	AM32	
AM31	31	AM31	
AM30	30	AM30	
AM29	29	AM29	
AM28	28	AM28	
AM27	27	AM27	
AM26	26	AM26	
AM25	25	AM25	
AM24	24	AM24	
AM23	23	AM23	
AM22	22	AM22	
AM21	21	AM21	
AM20	20	AM20	
AM19	19	AM19	
AM18	18	AM18	
AM17	17	AM17	

LC75711NE

K408
Open/Close

CN402
CON6_1.25MM_DIP_B

RB5
RA1
IR
REMOTE_IR
DGND

D5V
R414
20K
LL4148
D402
C410
2.2uF
DGND

20pF N/A
20pF N/A
20pF N/A
C412
C413
C414
DGND

Title			
HD980 FRONT PANEL: VFD BOARD			
Size A4	Document Number 5576C		Rev 1.6
Date: Wednesday, December 19, 2007	Sheet 2 of 2		

HD990 WIRING DIAGRAM

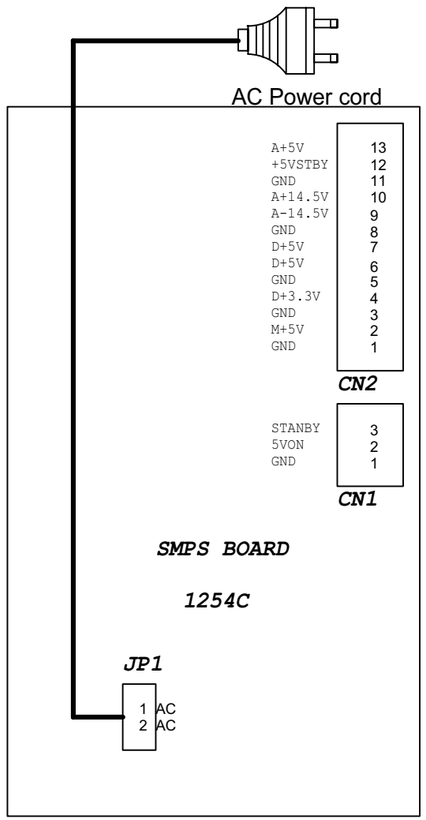

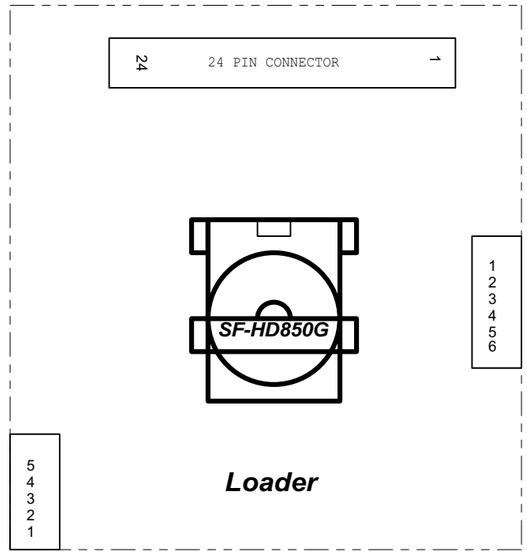

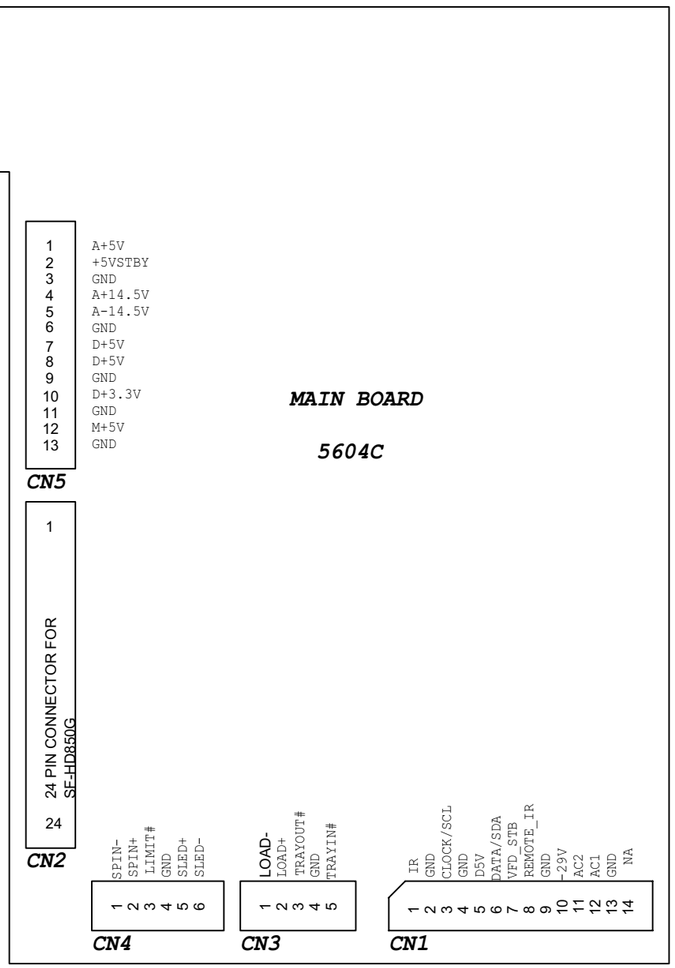

UNDERSIDE OF FRONT PANEL BOARD

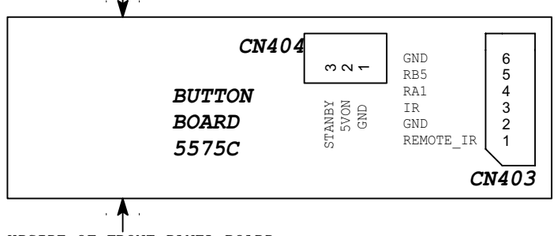

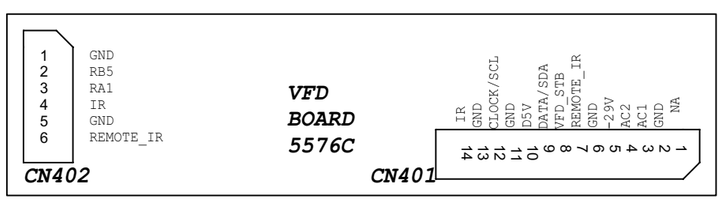

UPSIDE OF FRONT PANEL BOARD

Title	HD990 WIRING DIAGRAM		
Size: Custom	Document Number: HD990		Rev
Date: Friday, June 25, 2010	Sheet 1 of 1		